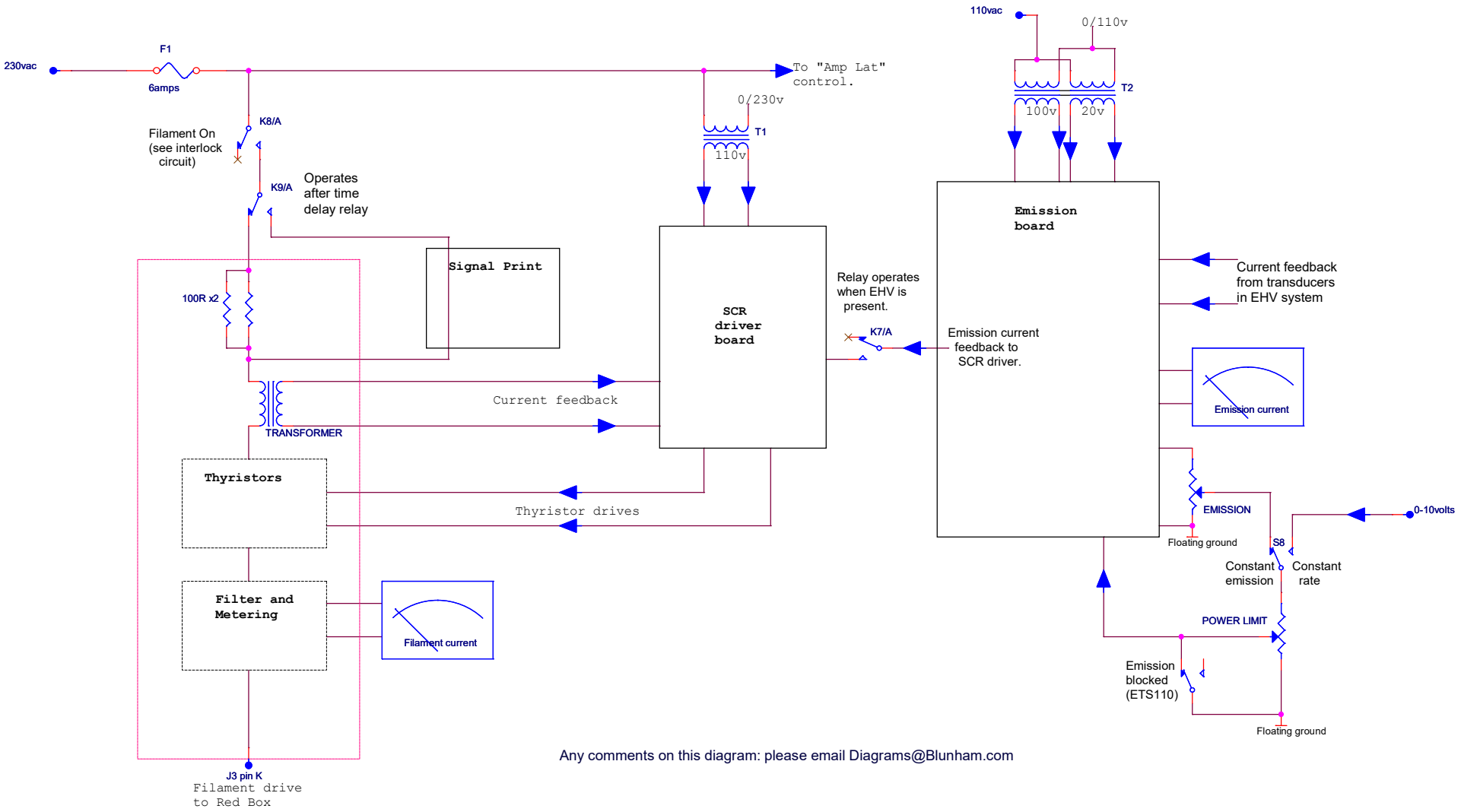

Any comments on this diagram: please email Diagrams@Blunham.com

Overall Emission diagram for Balzers EKS110 system.