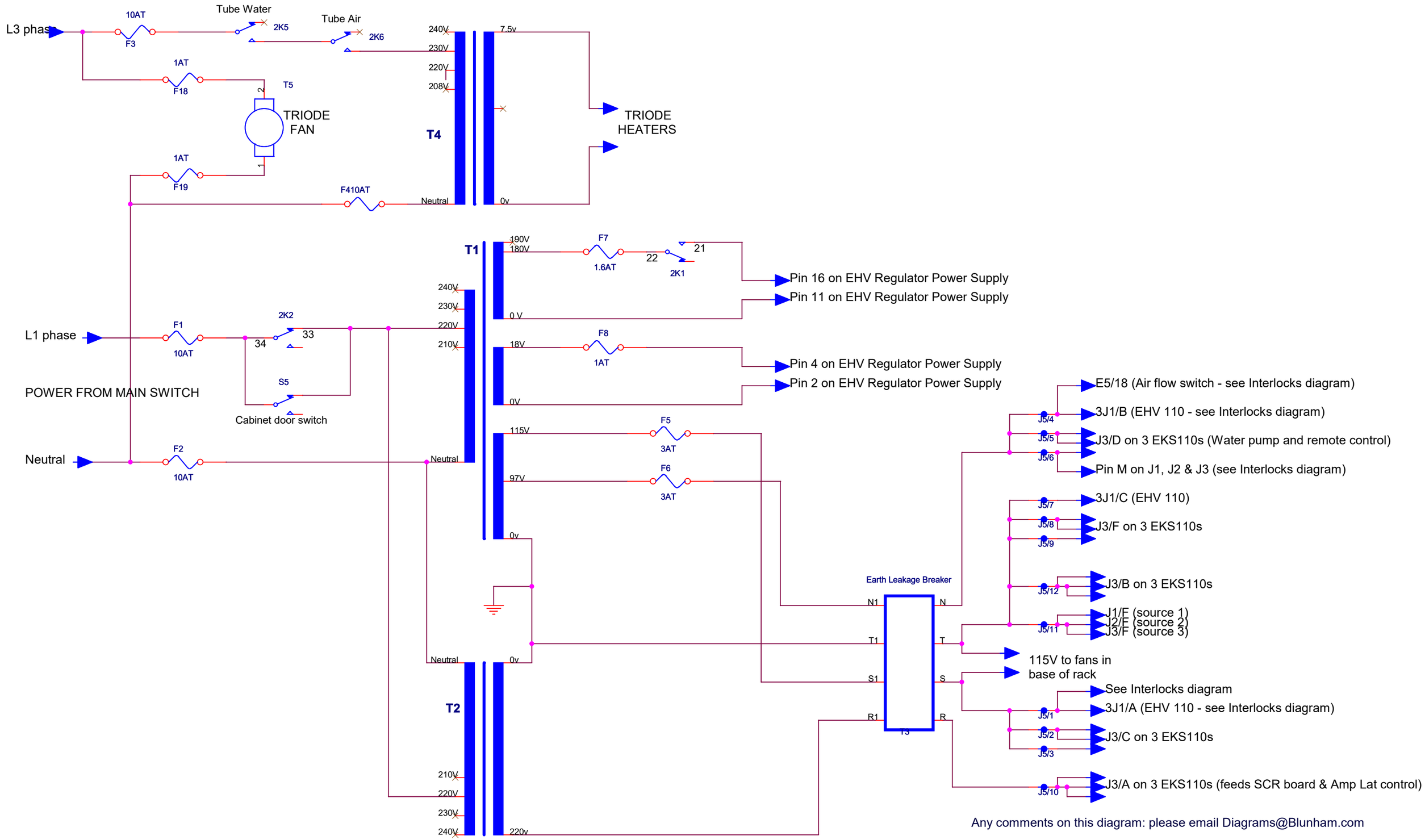

Any comments on this diagram: please email Diagrams@Blunham.com

EHV Rack Transformer Power Distribution for Balzers EKS110 system