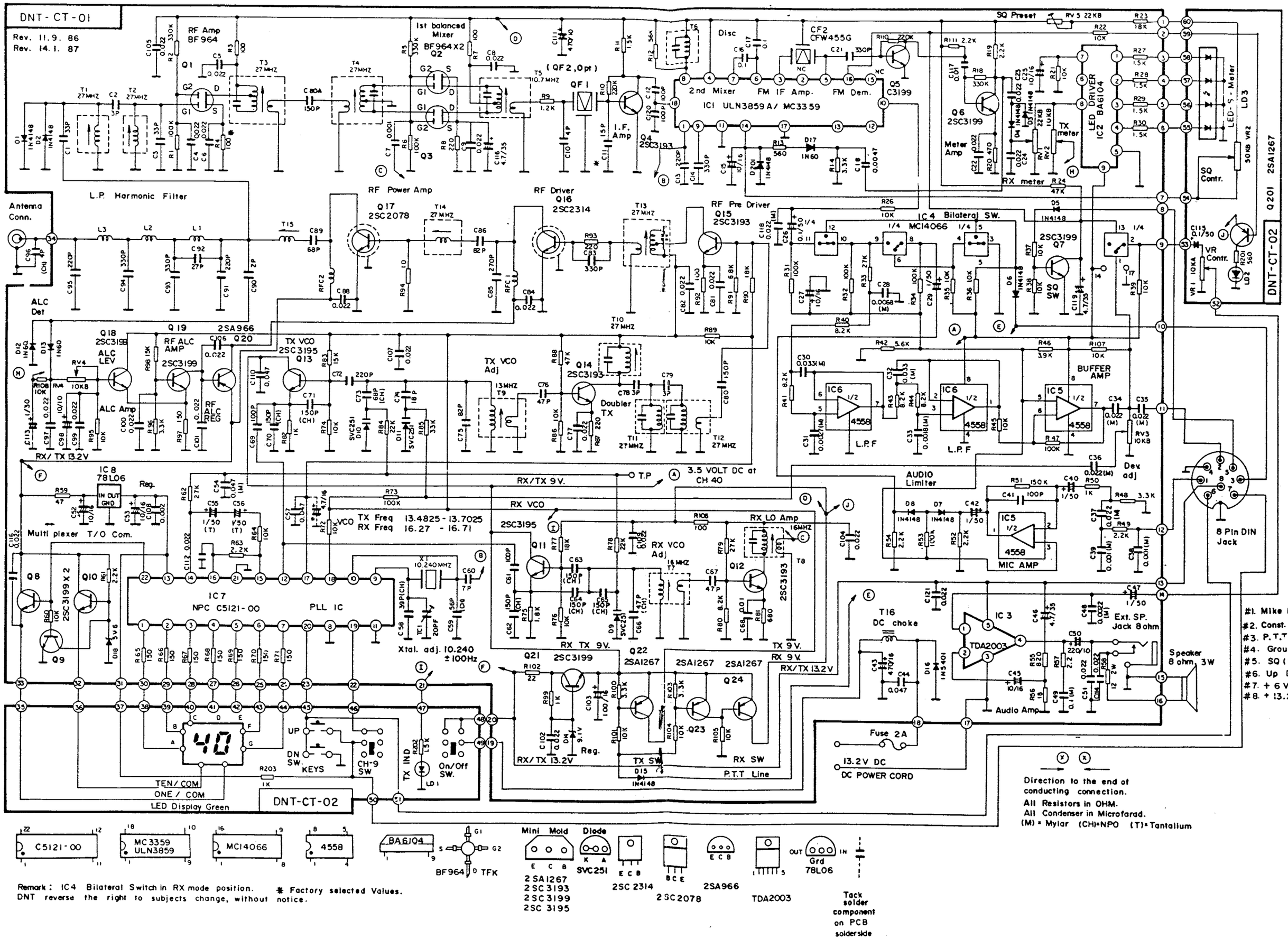

Remark : IC4 Bilateral Switch in RX mode position.
DNT reserve the right to subjects change, without notice.

✱ Factory selected Values.

SCHEMATIC DIAGRAM CONTACT 40 FM

Parts subject to change without notice