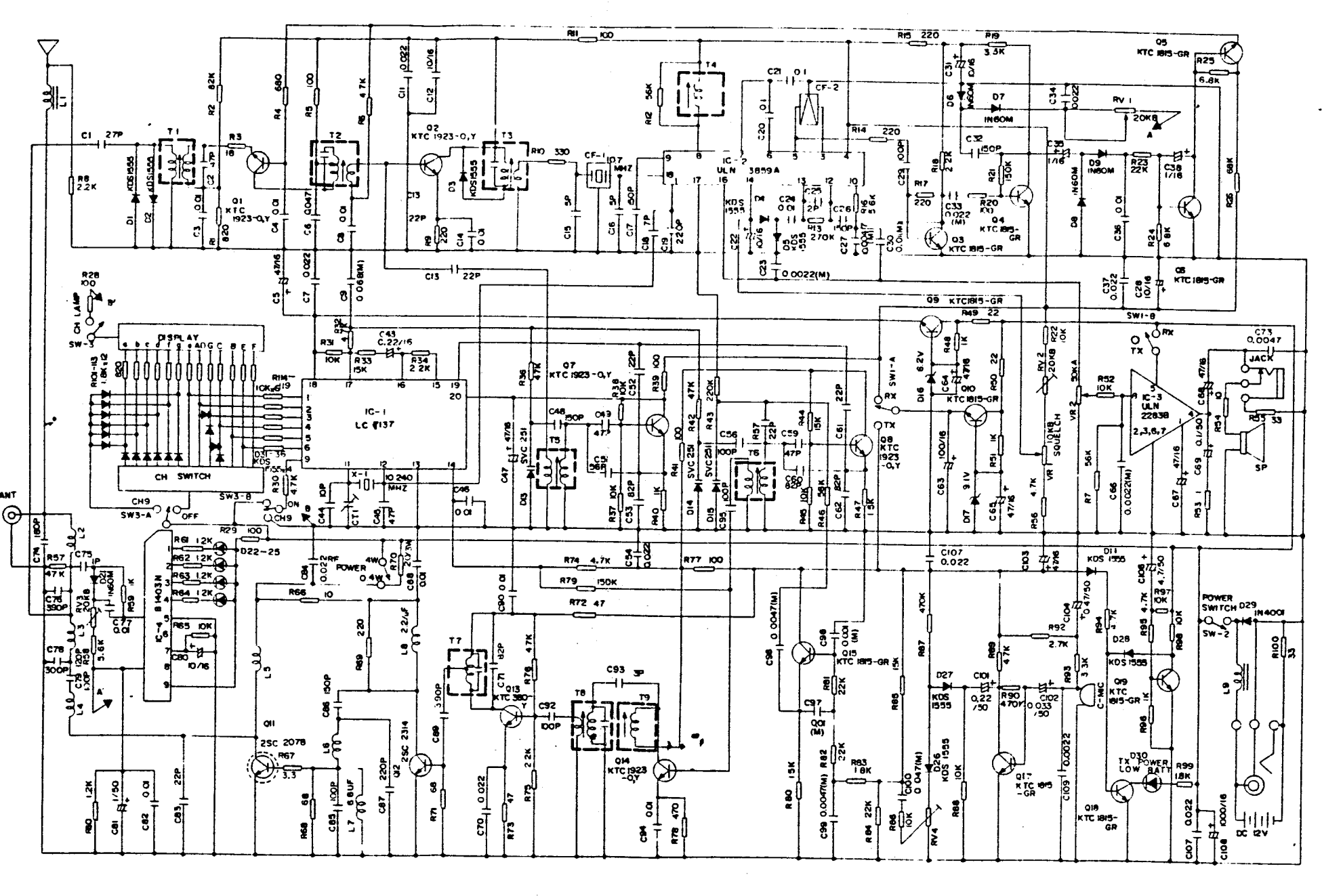

ANT
DISPLAY
CH SWITCH
IC-1
LC 7137
IC-2
ULN 3859A
IC-3
ULN 2283B
IC-4
B1403N
POWER
SQUELCH
JACK
POWER SWITCH
TX POWER LOW BATT
DC 12V