As you are now the owner of this document which should have come to you for free, please consider making a donation of £1 or more for the upkeep of the (Radar) website which holds this document. I give my time for free, but it costs me money to bring this document to you. You can donate here https://blunham.com/Misc/Texas

Many thanks.

Please do not upload this copyright pdf document to any other website. Breach of copyright may result in a criminal conviction.

This Acrobat document was generated by me, Colin Hinson, from a document held by me. I requested permission to publish this from Texas Instruments (twice) but received no reply. It is presented here (for free) and this pdf version of the document is my copyright in much the same way as a photograph would be. If you believe the document to be under other copyright, please contact me.

The document should have been downloaded from my website https://blunham.com/, or any mirror site named on that site. If you downloaded it from elsewhere, please let me know (particularly if you were charged for it). You can contact me via my Genuki email page: https://www.genuki.org.uk/big/eng/YKS/various?recipient=colin

You may not copy the file for onward transmission of the data nor attempt to make monetary gain by the use of these files. If you want someone else to have a copy of the file, point them at the website. (https://blunham.com/Misc/Texas). **Please do not point them at the file itself as it may move or the site may be updated.**

It should be noted that most of the pages are identifiable as having been processed by me.

I put a lot of time into producing these files which is why you are met with this page when you open the file.

If you find missing pages, pages in the wrong order, anything else wrong with the file or simply want to make a comment, please drop me a line (see above).

It is my hope that you find the file of use to you.

Colin Hinson
In the village of Blunham, Bedfordshire.

SPDU012

XDS TMS9995 Emulator Hardware

XDS Extended Development Support
Installation and Operation Guide

TEXAS INSTRUMENTS

PREFACE

The purpose of this manual is to familiarize the user with the TMS9995 Emulator board set, the target connector and the function of the status indicators on the XDS (Extended Development Support System). This manual also describes installation instructions for the TMS9995 Emulator board set, including the target connector. The TMS9995 Emulator consists of two boards to make up the TMS9995 Emulator board set. The microprocessor control board (PC board PN 2311040-0001) contains the control logic. The other board is the microprocessor interface (UP board PN 2311035-0001) which contains the target cable assembly. The user and installer should read this manual before attempting to operate or install any of the TMS9995 Emulator equipment. If the TMS9995 Emulator board set is removed from the XDS, this manual should be kept with the emulator for reference during future installation.

The following publications are available to support this manual:

Title	Part Number
XDS TMS9995 Emulator User's Guide	1603433-9701
XDS Breakpoint Trace Installation and Operation Guide	1603442-9701
XDS Memory Expansion Installation and Operation Guide	1603441-9701
XDS/22 Installation and Operation Guide	1603443-9701

15 OCTOBER 1983

TABLE of CONTENTS

Paragraph	Title	Page
	PREFACE	
	SECTION 1 TMS9995 EMULATOR INSTALLATION	
1.1	INTRODUCTION	1-1
1.1.1	Board Preparation and Options	1-1
1.1.1.1	Memory Configuration	1-1
1.1.1.2	Board Installation	1-2
1.1.2	Target Connector	1-6
	SECTION 2 OPERATION	
2.1	INTRODUCTION	2-1
2.2	Status Indicator Lights	2-1
2.3	TARGET CONNECTOR	2-2
2.3.1	Handling the Target Connector	2-2
2.3.2	Target Connector Features	2-3
2.4	POWER REQUIREMENTS	2-5
	SECTION 3 EMULATOR SPECIFICATIONS	
3.1	INTRODUCTION	3-1
3.1.1	TMS9995 Family Pin Assignments	3-1
3.1.2	Block Diagram	3-2
	APPENDIX A TMS9995 Emulator Schematics	

15 OCTOBER 1983

LIST of FIGURES

Figure	Title	Page
1-1	TMS9995 Emulator Board Set, PC Board	1-3
1-1	TMS9995 Emulator Board Set, UP Board	1-4
2-1	Target Connector	2-4
3-1	TMS9995 Emulator Block Diagram	3-3

LIST of TABLES

Table	Title	Page
1-1	PC Board Jumper Configuration	1-2
1-2	Chassis Configuration Label Information	1-5
2-1	TMS9995 Emulator Board Set DC Power Requirements .	2-5
3-1	Pin Assignments	3-1
3-1	Pin Assignments Continued	3-2

SECTION 1

TMS9995 EMULATOR INSTALLATION

1.1 INTRODUCTION

When the TMS9995 Emulator is ordered with the XDS then the emulator boards amd the target connector should already be installed. This section should be referenced if the TMS9995 Emulator is not installed or it is to be moved. Also reference this section if the memory option of the TMS9995 Emulator is to be changed.

1.1.1 Board Preparation and Options.

The TMS9995 emulator board set has a memory option that allows its memory size to be increased from 1K bytes to 7K bytes. To incorporate this option, the jumper configurations on the UP and PC boards and memory chips changed on the UP board must be changed as described in the following paragraphs. The TMS9995 Emulator board set is manufactured with the 1KB memory option installed. The jumper configuration should be checked before installing the TMS9995 Emulator board set.

1.1.1.1 Memory Configuration.

The Emulator has a total of 30K bytes of ROM and up to 8K bytes of RAM, both of which reside on the UP Board, while the Address Decode logic for these memories is located on the PC Board. The boards are configured with jumpers so either the smaller 2149 RAM (1Kx4) chips or the larger 2168 RAM (4Kx4) chips can be used. Both the UP and PC Boards have jumpers that are used in configuring the boards for the different memory chips, and both jumpers must be consistent. If one board is jumpered for the 2168 RAM chips, then the other board must also be jumpered for the same chips. The UP Board is manufactured with the 2149 RAM's in place; however, if these chips are ever removed, reinserting them in the board requires some explaination. This is done by moving the UP Board jumper to connect E1 and E2, and by inserting the 2149's into the RAM sockets such that the 2149's pin 1 fits into pin 2 of the socket. The PC Board jumper must be moved to connect E2 and E3. If the 2168 RAM's are inserted, the UP Board jumper must connect E2 to

E3, and the PC Board jumper must connect E1 to E2.

You should check the TMS9995 UP board to see which type of memory chip is installed and set the jumper per Table 1-1. Figure 1-1 shows the jumper pin locations on the TMS9995 PC and UP boards.

Table 1-1 PC Board Jumper Configuration

Board Type	1K MEMORY 2149	4K MEMORY 2168
PC	E2 - E3	E1 - E2
UP	E1 - E2	E2 - E3

1.1.1.2 Board Installation.

CAUTION

Power must be turned off before installing or removing circuit boards.

The XDS Model XX Installation and Operation Guide describes the procedure for installing or removing boards from the XDS units. The appropriate manual should be referenced for the model of the XDS being used. If an emulator board or board set currently reside in the XDS, then they must be removed before installing the TMS9995 Emulator board set.

Boards that have been removed from the chassis should be stored so that they are protected from static discharge. Erase the board infokrmation on the chassis configuration label for each circuit board that is removed.

For the TMS9995 Emulator board set enter the following information on the chassis configuration label as given in Table 1-2.

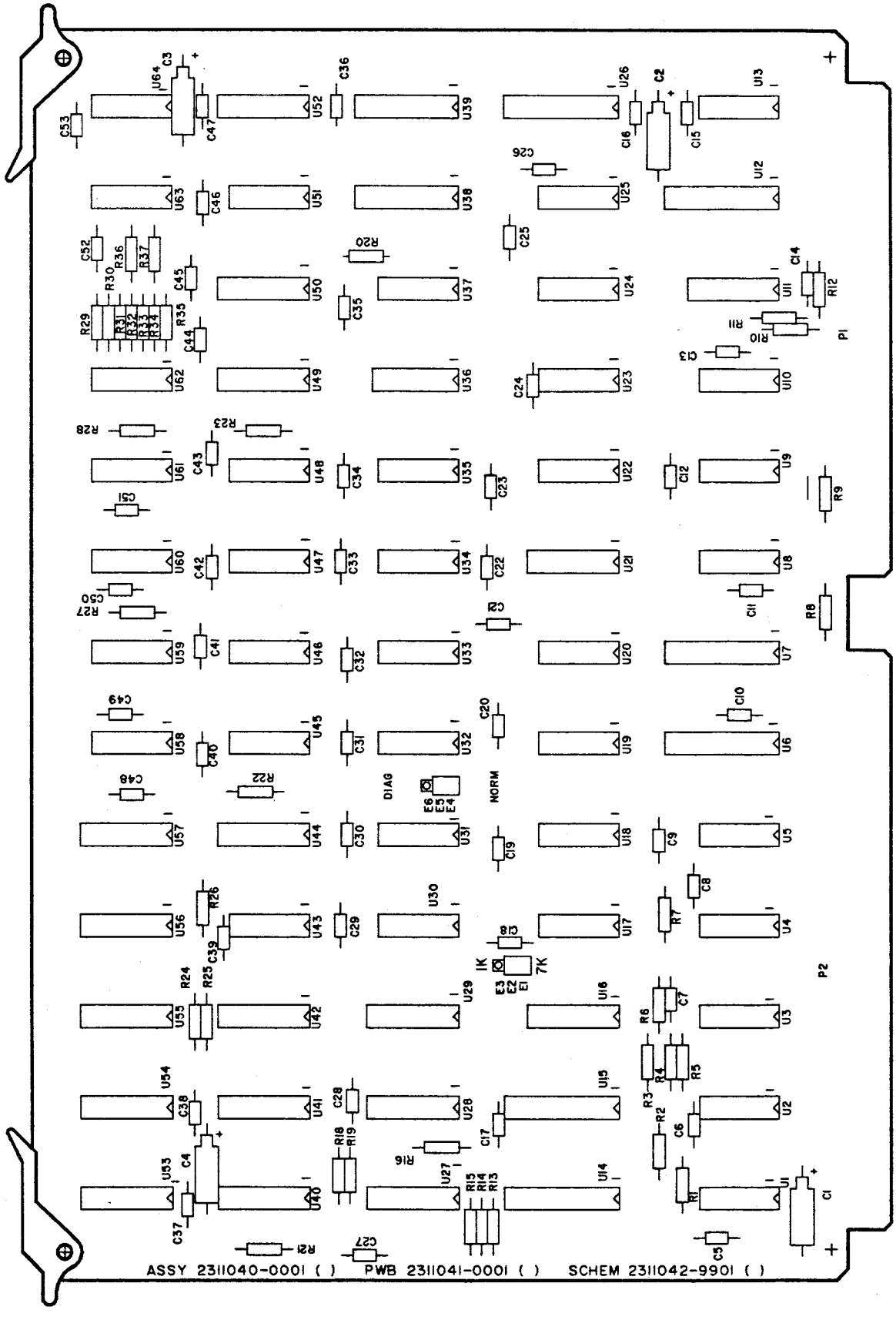

Figure 1-1 TMS9995 Emulator Board Set, PC Board

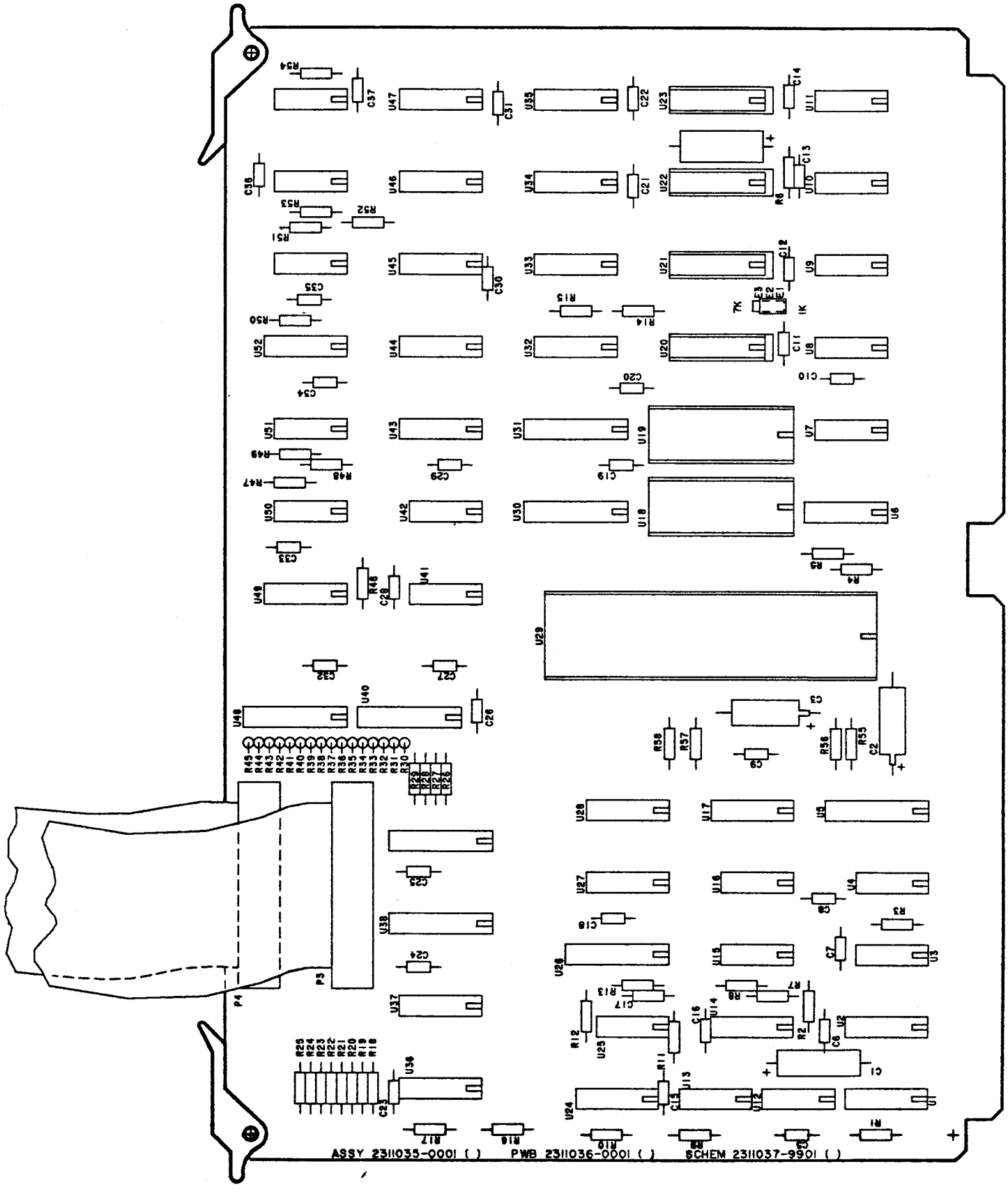

Figure 1-1 TMS9995 Emulator Board Set, UP Board

Table 1-2 Chassis Configuration Label Information

Block Title	Information to be Entered
PWB Description	TMS9995 UP
Part No	2311035-0001
Rev	ENTER REVISION LETTER FROM TMS9995 UP BOARD.
PWB Description	TMS9995/96 PC
Part No	2311040-0001
Rev	ENTER REVISION LETTER FROM TMS9995 PC BOARD.

Complete the installation per the appropriate XDS installtion and operation guide.

CAUTION

DO NOT OPERATE THE XDS UNIT WITH THE FRONT PANEL REMOVED. THE FRONT PANEL IS REQUIRED FOR PROPER AIR CIRCULATION AND COOLING OF THE CIRCUIT BOARDS. ALSO THE FRONT PANEL IS REQUIRED TO PREVENT LEAKAGE OF RFI/EMI RADIATION.

Restore power to the XDS unit. Allow at least five seconds to elapse after power up before activating the monitor. The monitor may be activated by entering two carriage returns from the terminal keyboard. The screen should display the following:

```
                    TEXAS INSTRUMENTS

                TMS9995     XDS     VERSION 1.3.0

COMMANDS:
 INIT       IM      DR      RUN     BP      TR      HOST    IMP
 IPORT      DM      MR      CRUN    BPM     TRM     IHC     IND
 IPRAM      MM      DIO     SS      BPIO    TRIO    UL      ID
 ICC                MIO     SRR             TRIX    DL      BGND
 RCC                                        SOR
 RESTART

 MAP        FILL    XA      DPS     SSB     IT      LOG     GRUN
            FIND    XRA     DHS     DSB     DT      SNAP    TRUN
            DW              DTS     CSB             HELP    GHALT
                                    CASB            DV      THALT

VARIABLES:
 PC         R       LGT     C       INTM
 ST                 AGT     OV
 WP                 EQ      OP
?
```

If the monitor does not respond with the proper display, check the installation of the TMS9995 Emulator board set. Refer to the appropriate XDS installation and operation Manual to ensure correct connection to the terminal.

1.1.2 Target Connector.

The target connector is permanently connected to the target cables and does not require additional customer installation. The target connector uses an Auget socket to interface to the target system. A spare socket is supplied with the emulator and should be safeguarded for future use. The target connector should be handled with care at all times.

SECTION 2

OPERATION

2.1 INTRODUCTION

Operation of the emulator is primarily carried out with the emulator software that is referenced in the TMS9995 Emulator User's Guide. The hardware features and connections are discussed in the XDS Installation and Operation Guide. The hardware features are highlighted below:

1. POWER SWITCH: Turns power on to the unit (Model 22 only).

2. POWER LIGHT: Lights when power is applied to the unit.

3. RESET SWITCH: Returns monitor to the control mode.

4. STATUS LIGHTS: Gives emulator status.

The status lights and power requirements are unique for each emulator and are discussed below for the TMS9995 Emulator. The functions of these lights are as follows:

2.2 Status Indicator Lights

The XDS has four status indicator lights that are controlled by the TMS9995 Emulator. The function of these lights are as follows:

1. Status Indicator #1 -- IDLE -- This light comes on when the TMS9995 is in the idle mode, which indicates that the processor is executing an IDLE instruction, (opcode equal >0340). The optional breakpoint/trace board must be installed in the XDS in order for the idle light to operate. The idle idicator rresets upon an interrupt acknowledge or when the emulator enters the control mode.

2. Status Indicator #2 -- INTERRUPT REQUEST -- This indicator turns on when a target or decrementer interrupt request is detected and remains on until the interrupt request is cleared or acknowledged.

3. Status Indicator #3 -- HOLD ACKNOWLEDGE -- This indicator turns on when a target hold has occurred and the TMS9995 has acknowledged the HOLD with the HOLDA signal.

4. Status Indicator #4 -- READY -- This indicator comes on when the system (meaning the XDS plus the target system) is in a ready state and turns off when the system is not ready. This indicator is aways on if the target cable is not connected to a target system.

2.3 TARGET CONNECTOR

The target connector is installed in the target system in place of the processor to be emulated. The target system can be any circuit which incorporates one or more processors. The target connector pin out and signal characteristics are provided in Section 3.

2.3.1 Handling the Target Connector.

The target connector should be handled with extreme care at all times because the pins are extremely delicate. Take the following precautions when handling the target connector.

1. To prevent an accidental short when connecting or disconnecting the target connector, you should power down the target system and the XDS unit.

NOTE

The XDS may not operate correctly when the target connector is connected to a system that is not powered up.

2. When the target connector is not in use, the pins must be protected to prevent physical damage to the pins and to the XDS unit resulting from electrical short circuits. The pins may be protected by using the gray plastic pin cover supplied with the unit or non-conductive foam. Conductive material should never be used for protecting the target connector pins, since this may cause operation problems with the emulator.

2.3.2 Target Connector Features.

The target connector incorporates the following features to simplify the user's task of working with the target connector and the emulator system:

1. The location of pin 1 is referenced by the yellow dot on the target connector. Figure 2-1 shows the location of the yellow dot with respect to pin 1.

2. Test pins are located on the top of the target connector and correspond one-to-one to the pins that plug into the target system. The exception to this is XTAL1, XTAL2, and VCC. XTAL1 drives an oscillator inside the target housing, XTAL2 drives another input to the same oscillator and VCC supplies power to the oscillator. Pins 1 and 10 on the top of the target connector are open. Pin 2 comes from the oscillatior. You should use push-on test probes rather than clips or hooks to access these test pints.

3. A ground connection is provided at each end of the target connector. These mate with the ground cable that is provided with the emulator. This cable screws into the target connector and should be clipped to a ground post on the target system.

NOTE

To ensure a good target system to target-connector ground, the target-connector grounding cable must be properly installed. This is particulary important when operating at high frequencies.

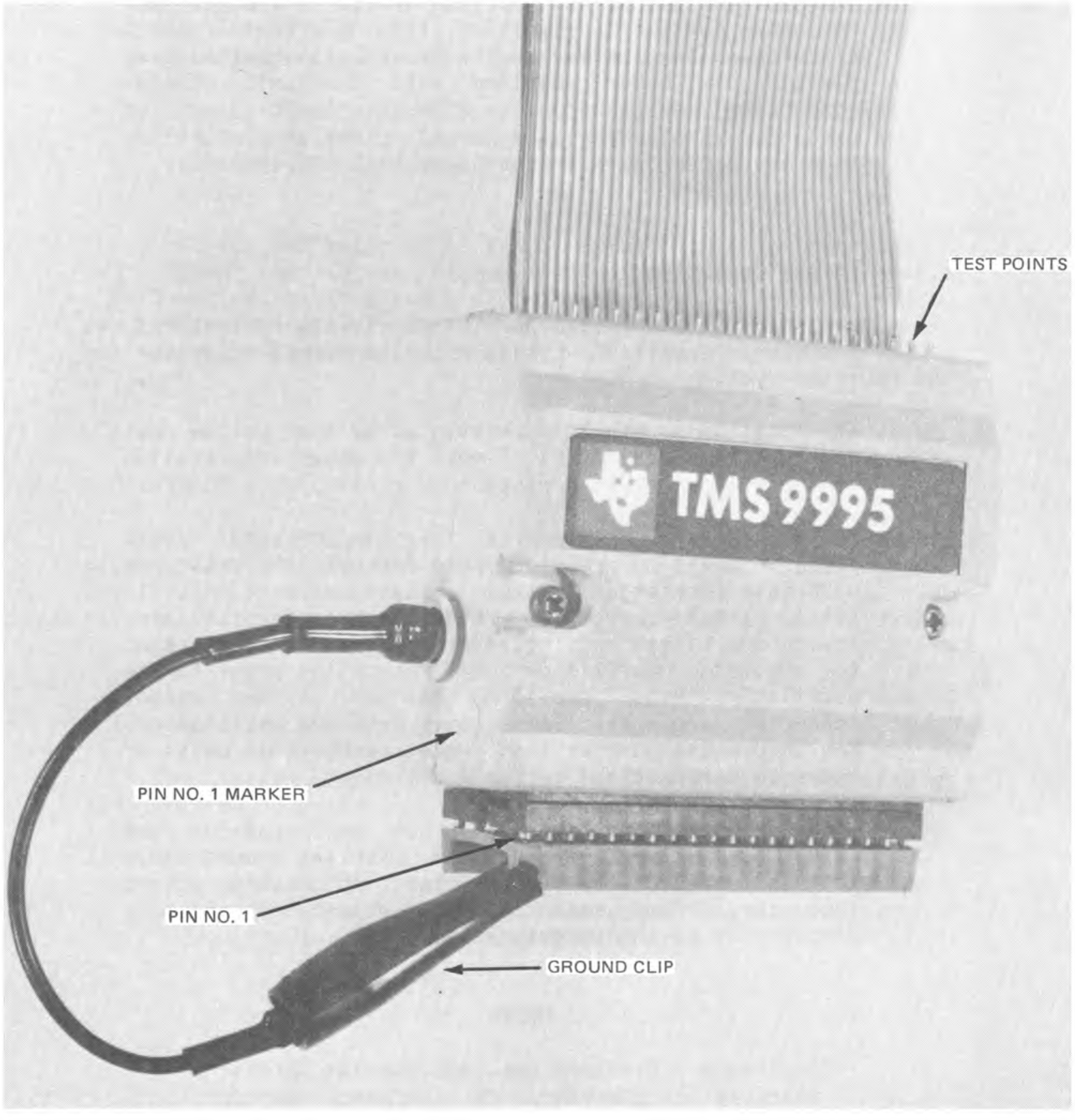

Figure 2-1 Target Connector

4. The target connector pin interface to the target system is a 40-pin socket. This socket can be removed from the target connector and replaced if a pin is broken. One extra socket is included with the emulator and should be safeguarded for this use. If more replacement sockets are needed, they should be replaced with Auget #540-AG10D.

2.4 POWER REQUIREMENTS

Table 2-1 shows the DC power requirements for the TMS9995 Emulator board set. This information can be used to calculate the total DC power requirements of the XDS system. When adding new boards to the system this DC power calculate should be made to ensure that the XDS power supply will not be overloaded. Refer to the appropriate XDS Installation and Operation Guide for the power supply rating information. The power requirements for the other circuit boards can be obtained from their appropriate reference manuals.

Table 2-1 TMS9995 Emulator Board Set DC Power Requirements

BOARD PART NUMBER	+ 5 Volts (Amps)	+ 12 Volts (Amps)	- 12 Volts (Amps)
2311035-0001	1.50	0	0
2311040-0001	1.25	0	0

SECTION 3

EMULATOR SPECIFICATIONS

3.1 INTRODUCTION

This secton describes the following for the TMS9995:

1. Pin Assignments
2. Block Diagram of Emulator

3.1.1 TMS9995 Family Pin Assignments.

Table 3-1 shows the target connector pin assignments for the TMS9995.

Table 3-1 Pin Assignments

SIGNAL NAME	PIN	REMARKS
XTAL1	1	DRIVES OSCILLATOR INSIDE TARGET HOUSING
XTAL2/CLKIN	2	DRIVES OSCILLATOR INSIDE TARGET HOUSING
CLKOUT	3	
D7	4	
D6	5	
D5	6	
D4	7	
D3	8	
D2	9	
VCC	10	DRIVES OSCILLATOR ONLY - OPEN TO EMULATOR
D1	11	
D0	12	
CRUIN	13	
INT4-/EC-	14	
INT1-	15	
IAQ/HOLDA	16	
DBIN-	17	
HOLD-	18	
WE-/CRUCLK-	19	
MEMEN-	20	

Table 3-1 Pin Assignments Continued

SIGNAL NAME	PIN	REMARKS
A15/CRUOUT	40	
A14	39	
A13	38	
A12	37	
A11	36	
A10	35	
A9	34	
A8	33	
A7	32	
VSS	31	EMULATOR LOGIC GROUND, EARTH GROUND
A6	30	
A5	29	
A4	28	
A3	27	
A2	26	
A1	25	
A0	24	
READY	23	
RESET-	22	
NMI-	21	

3.1.2 Block Diagram.

Figure 3-1 shows a block diagram of the TMS9995 Emulator. This is a single processor emulator where the TMS9996 controls both the emulator interface as well as the user interface.

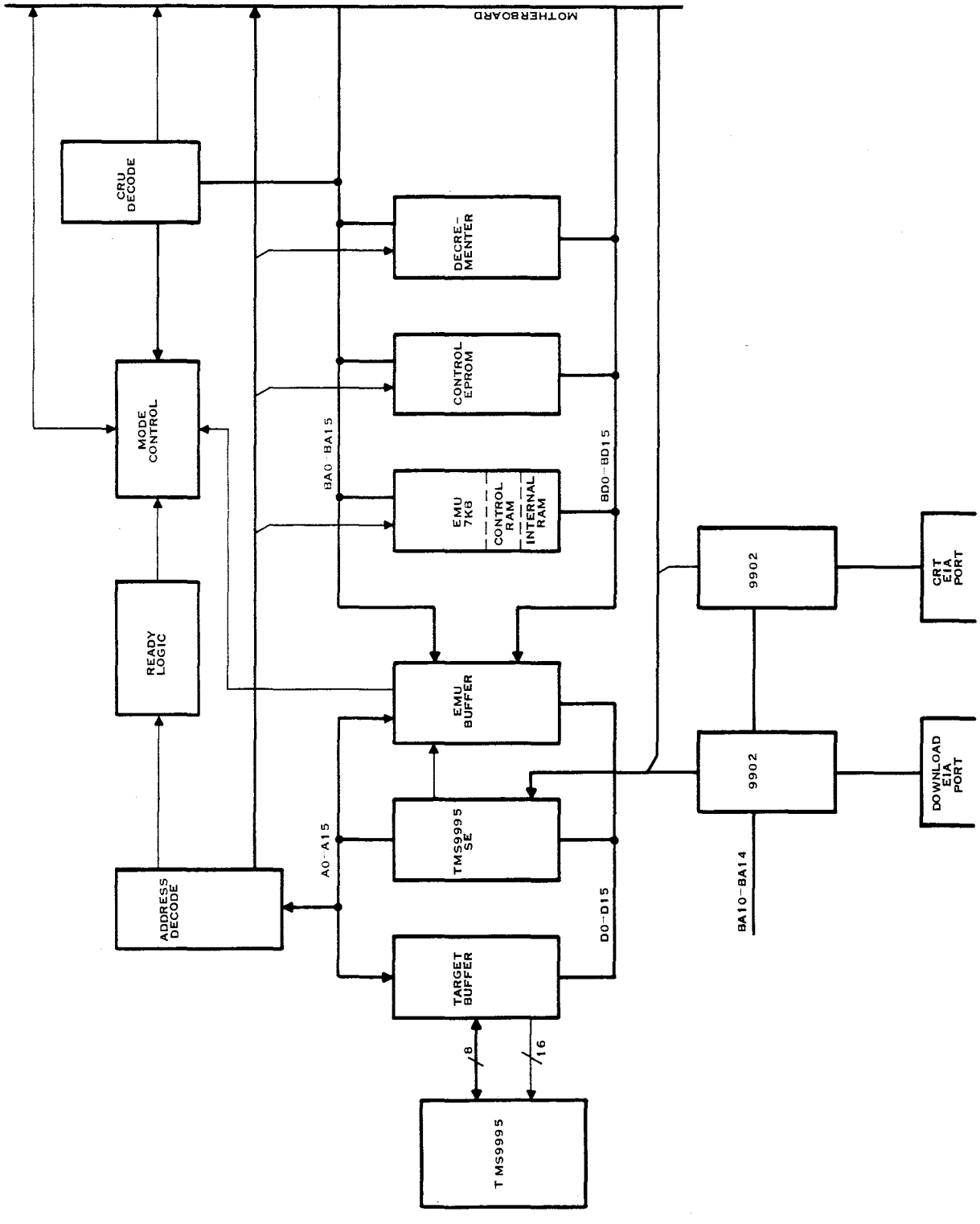

Figure 3-1 TMS9995 Emulator Block Diagram

APPENDIX A

TMS9995 Emulator Schematics

NOTES: UNLESS OTHERWISE SPECIFIED:

1. ALL DEVICE TYPES ARE PREFIXED WITH SN74.
2. VCC IS APPLIED TO PIN 8 OF ALL 8-PIN IC'S, PIN 14 OF ALL 14-PIN IC'S, PIN 16 OF ALL 16-PIN IC'S, PIN 20 OF ALL 20-PIN IC'S, ETC.
3. GROUND IS APPLIED TO PIN 4 OF ALL 8-PIN IC'S, PIN 7 OF ALL 14-PIN IC'S, PIN 8 OF ALL 16-PIN IC'S, PIN 10 OF ALL 20-PIN IC'S, ETC.
4. DEVICE TYPE, PIN NUMBERS, AND REFERENCE DESIGNATOR OF IC IS SHOWN AS FOLLOWS:

LS00 AND LS04 = DEVICE TYPE
1, 2, AND 3 = PIN NUMBERS
U2 AND U14 = REFERENCE DESIGNATOR

5. RESISTANCE VALUES ARE IN OHMS.
6. RESISTORS ARE 1/4 WATT, 5%.
7. CAPACITANCE VALUES ARE IN MICROFARADS.
8. U1, U2, U10 AND U11 ARE OPEN IC LOCATIONS.
9. MSB / LSB DEFINITIONS:
   A00 = MSB DB00 = MSB
   A15 = LSB DB15 = LSB.

DWG NO 2311047 SH 1

REVISIONS

REV	DESCRIPTION	DATE	APPROVED
A	CN500500(E) / Vale, j.	10-24-83	C. KEELER

3 QTY	2 QTY	1 QTY	ITEM NO	PART OR IDENTIFYING NUMBER	NOMENCLATURE OR DESCRIPTION	NOTES

PARTS LIST

SEQ NO	IDENT	F SPEC	NO	ADDITIONAL	NOTES
	PROCESS			CLASSIFICATION	

SPACE "NO" = SPECIFICATION TO GOVERNING SPECIFICATIONS. SEE TI DRAWING 125487

REV STATUS OF SHEETS	REV	A							A			A	
	SH	1	2	3	4	5	6	7	8	9	10	11	

UNLESS OTHERWISE SPECIFIED
- DIMENSIONS ARE IN MILLIMETERS
- TOLERANCES 2 PLACE DECIMALS ±0.25
- 1 PLACE DECIMALS ±0.5 ANGLES ±1°
- INTERPRET DRAWING PER DOD-D-1300
- REMOVE ALL BURRS AND SHARP EDGES
- CONCENTRICITY MACHINED DIAMETERS 0.25 FIM
- DIMENSIONAL LIMITS APPLY BEFORE PROCESSES
- PARENTHETICAL INFO FOR REF ONLY

HOLE TOLERANCE	
0.33 THRU 3.18	+0.10 -0.03
3.20 THRU 6.35	+0.13 -0.03
6.38 THRU 12.70	+0.15 0.23
12.73 THRU 19.05	+0.20 -0.03
19.08 THRU 25.40	+0.25 -0.03
25.43 THRU 50.80	+0.30 0.03

THIRD ANGLE PROJECTION

2311045	7119
NEXT ASSY	USED ON
APPLICATION	

		DATE
DSN	C. KEELER	1-3-83
DR	C. KEELER	4-4-83
ENGR		7-6-83
APPD FOR		
SA		
APPD MFG		
RLSE		8-3-83

TEXAS INSTRUMENTS INCORPORATED
Digital Systems Group

SI-METRIC

LOGIC DIAGRAM, B/T CARD

SIZE	FSCM NO	DRAWING NO
D	06668	2311047

SCALE 1:1 E | SHEET 1 OF 11

A-3

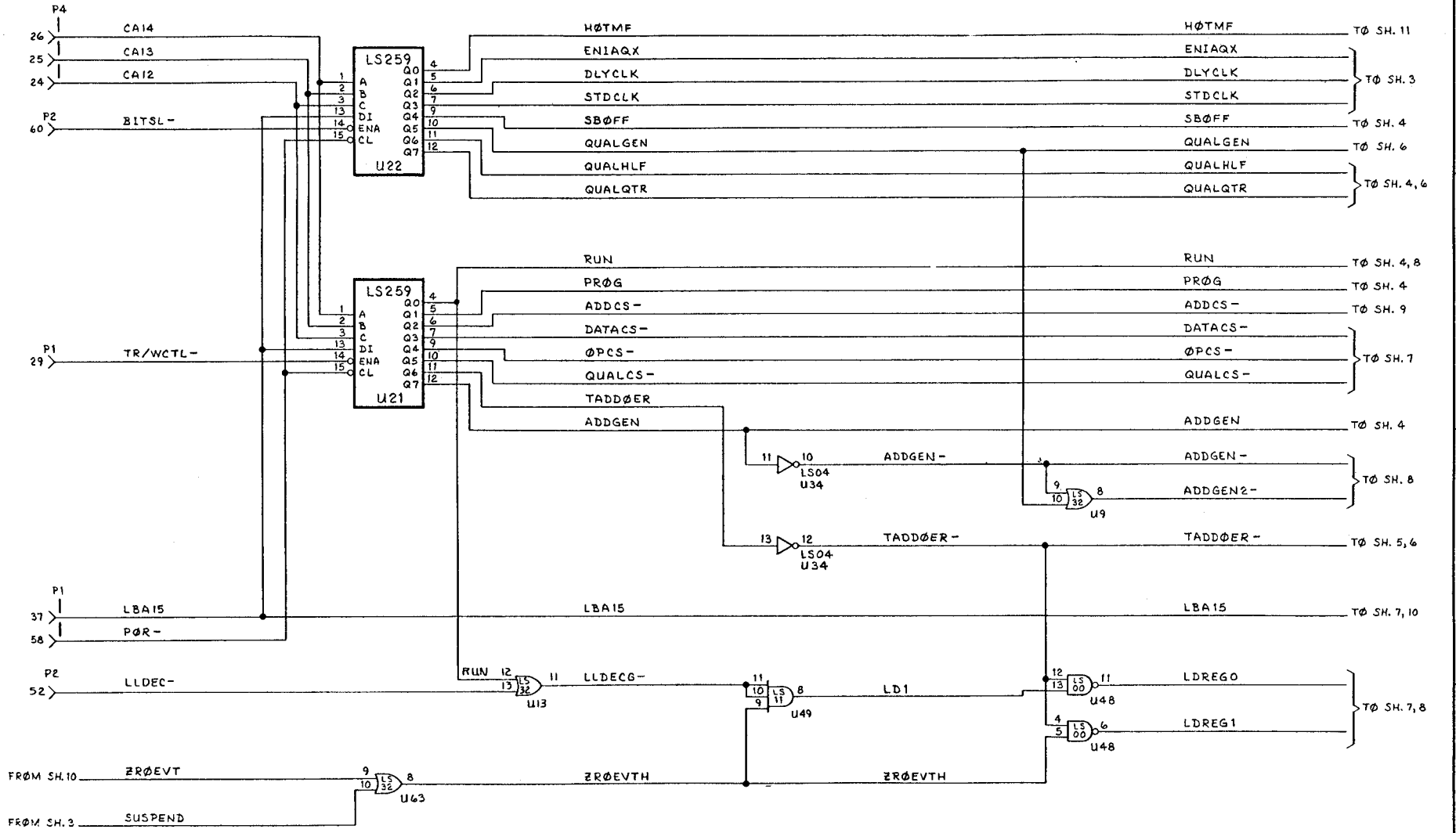

TEXAS INSTRUMENTS
D96214
DRAWING NO 2311047
SHEET 2

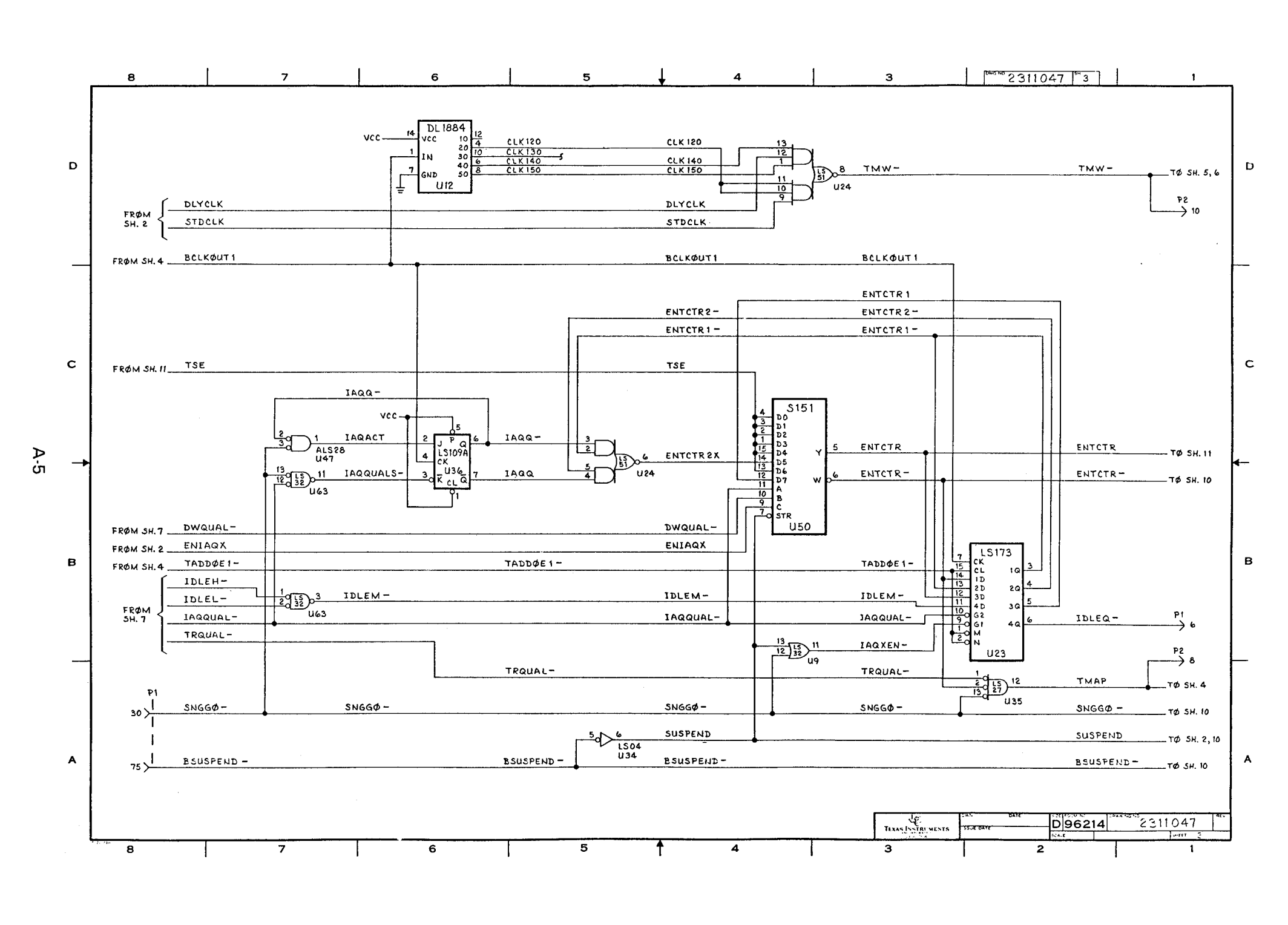
DL1884
U12
VCC
GND
IN
CLK120
CLK130
CLK140
CLK150
U24
TMW-
TØ SH. 5, 6
P2
10
FROM SH. 2
DLYCLK
STDCLK
FROM SH. 4
BCLKØUT1
ENTCTR1
ENTCTR2-
ENTCTR1-
FROM SH. 11
TSE
IAQQ-
ALS28
U47
IAQACT
LS109A
U36
IAQQUALS-
U63
S151
U50
ENTCTR2X
ENTCTR
ENTCTR-
TØ SH. 11
TØ SH. 10
FROM SH. 7
DWQUAL-
FROM SH. 2
ENIAQX
FROM SH. 4
TADDØE1-
LS173
U23
IDLEH-
IDLEL-
IAQQUAL-
TRQUAL-
FROM SH. 7
IDLEM-
IDLEQ-
P1
6
U9
IAQXEN-
P2
8
TMAP
TØ SH. 4
U35
SNGGØ-
TØ SH. 10
P1
30
75
BSUSPEND-
LS04
U34
SUSPEND
TØ SH. 2, 10

A-5

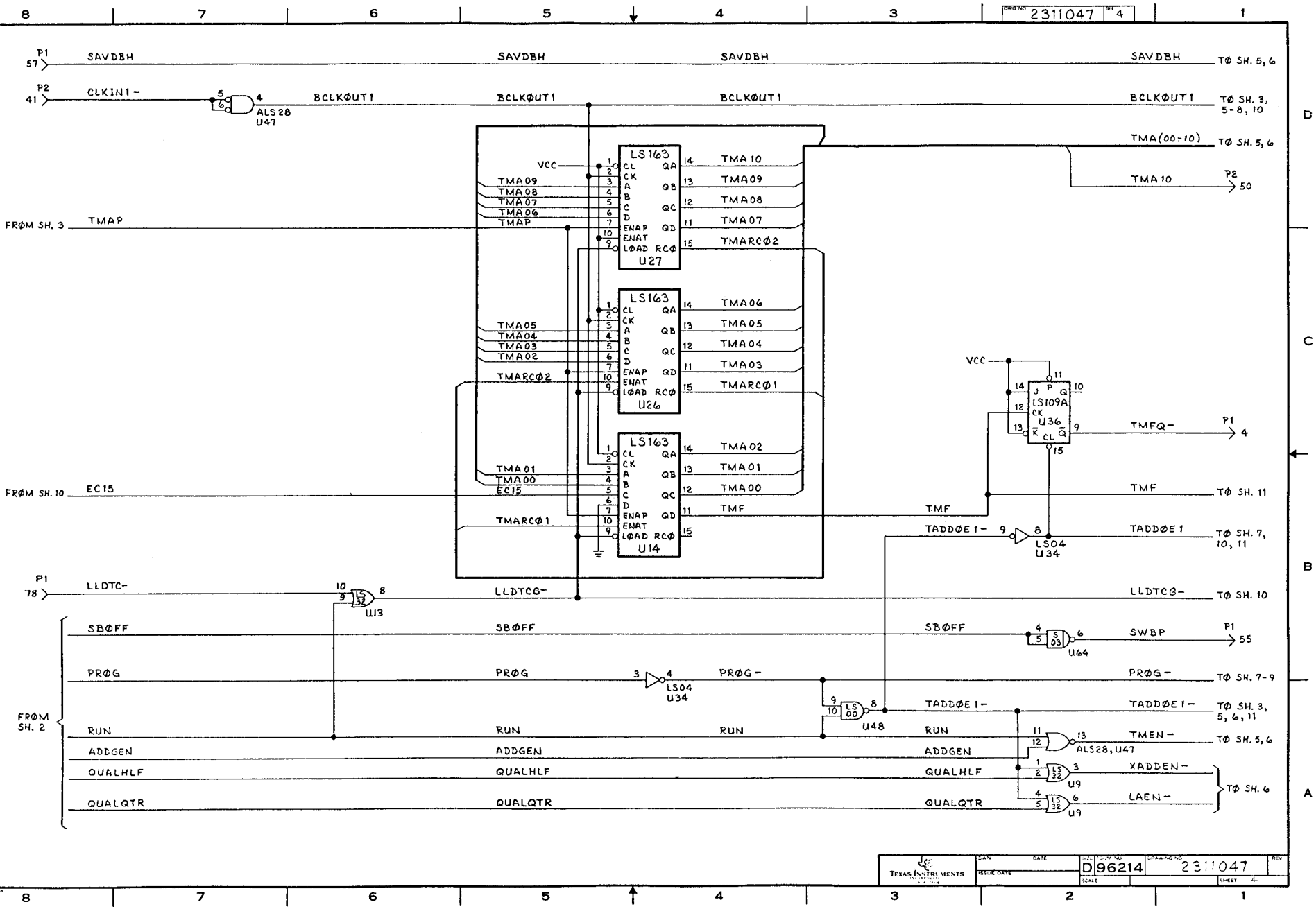
DWG NO 2311047 SH 4
P1 57 SAVDBH
SAVDBH
SAVDBH
SAVDBH TØ SH. 5, 6
P2 41 CLKIN1-
ALS28 U47
BCLKØUT1
BCLKØUT1
BCLKØUT1
BCLKØUT1 TØ SH. 3, 5-8, 10
TMA(00-10) TØ SH. 5, 6
TMA10 P2 50
FROM SH. 3 TMAP
LS163 U27
VCC
TMA09
TMA08
TMA07
TMA06
TMAP
TMA10
TMA09
TMA08
TMA07
TMARCØ2
LS163 U26
TMA05
TMA04
TMA03
TMA02
TMARCØ2
TMA06
TMA05
TMA04
TMA03
TMARCØ1
LS163 U14
TMA01
TMA00
EC15
TMARCØ1
TMA02
TMA01
TMA00
TMF
FROM SH. 10 EC15
LS109A U36
VCC
TMFQ- P1 4
TMF
TMF TØ SH. 11
TADDØE1-
LS04 U34
TADDØE1
TADDØE1 TØ SH. 7, 10, 11
P1 78 LLDTC-
LS32 U13
LLDTCG-
LLDTCG-
LLDTCG- TØ SH. 10
SBØFF
SBØFF
SBØFF
LS03 U64
SWBP P1 55
PRØG
PRØG
LS04 U34
PRØG-
PRØG-
PRØG- TØ SH. 7-9
FROM SH. 2
RUN
RUN
RUN
LS00 U48
TADDØE1-
TADDØE1- TØ SH. 3, 5, 6, 11
ADDGEN
ADDGEN
ADDGEN
TMEN-
ALS28, U47
TMEN- TØ SH. 5, 6
QUALHLF
QUALHLF
QUALHLF
LS32 U9
XADEN-
QUALQTR
QUALQTR
QUALQTR
LS32 U9
LAEN-
TØ SH. 6
TEXAS INSTRUMENTS
D 96214
2311047
A-6

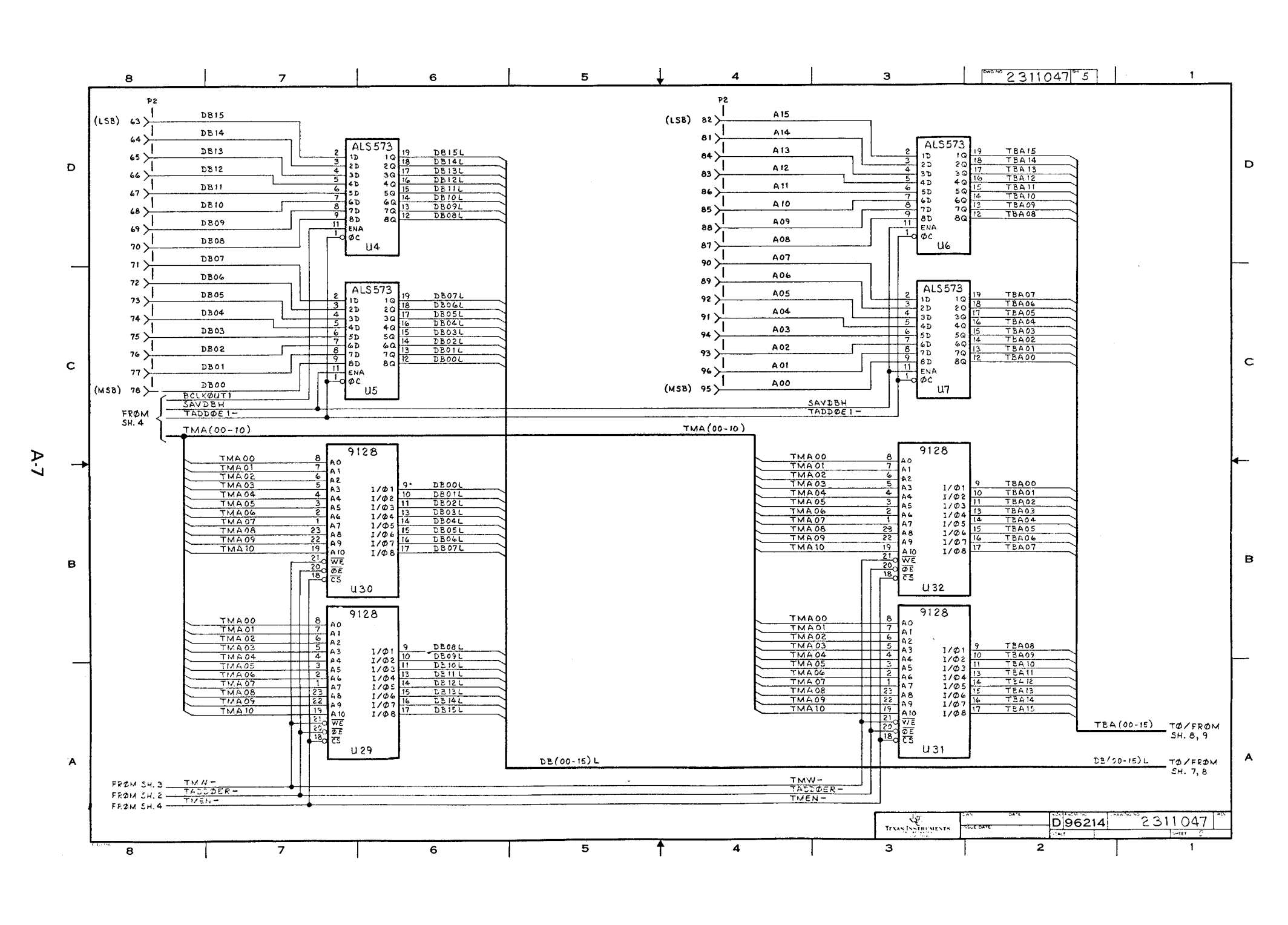
DWG NO 2311047 SHT 5
P2
(LSB) 63 DB15
64 DB14
65 DB13
66 DB12
67 DB11
68 DB10
69 DB09
70 DB08
71 DB07
72 DB06
73 DB05
74 DB04
75 DB03
76 DB02
77 DB01
(MSB) 78 DB00
ALS573
U4
DB15L DB14L DB13L DB12L DB11L DB10L DB09L DB08L
U5
DB07L DB06L DB05L DB04L DB03L DB02L DB01L DB00L
BCLKØUT1
SAVDBH
TADDØE1-
FRØM SH. 4
TMA(00-10)
P2
(LSB) 82 A15
81 A14
84 A13
83 A12
86 A11
85 A10
88 A09
87 A08
90 A07
89 A06
92 A05
91 A04
94 A03
93 A02
96 A01
(MSB) 95 A00
U6
TBA15 TBA14 TBA13 TBA12 TBA11 TBA10 TBA09 TBA08
U7
TBA07 TBA06 TBA05 TBA04 TBA03 TBA02 TBA01 TBA00
SAVDBH
TADDØE1-
TMA(00-10)
9128
TMA00 TMA01 TMA02 TMA03 TMA04 TMA05 TMA06 TMA07 TMA08 TMA09 TMA10
A0 A1 A2 A3 A4 A5 A6 A7 A8 A9 A10
1/Ø1 1/Ø2 1/Ø3 1/Ø4 1/Ø5 1/Ø6 1/Ø7 1/Ø8
WE ØE CS
U30
DB00L DB01L DB02L DB03L DB04L DB05L DB06L DB07L
U29
DB08L DB09L DB10L DB11L DB12L DB13L DB14L DB15L
U32
TBA00 TBA01 TBA02 TBA03 TBA04 TBA05 TBA06 TBA07
U31
TBA08 TBA09 TBA10 TBA11 TBA12 TBA13 TBA14 TBA15
TBA(00-15)
TØ/FRØM SH. 8, 9
DB(00-15)L
DB(00-15)L
TØ/FRØM SH. 7, 8
FRØM SH. 3 TMWN-
FRØM SH. 2 TADDØER-
FRØM SH. 4 TMEN-
TMWN-
TADDØER-
TMEN-
TEXAS INSTRUMENTS
D 96214
2311047
SHEET 5
A-7

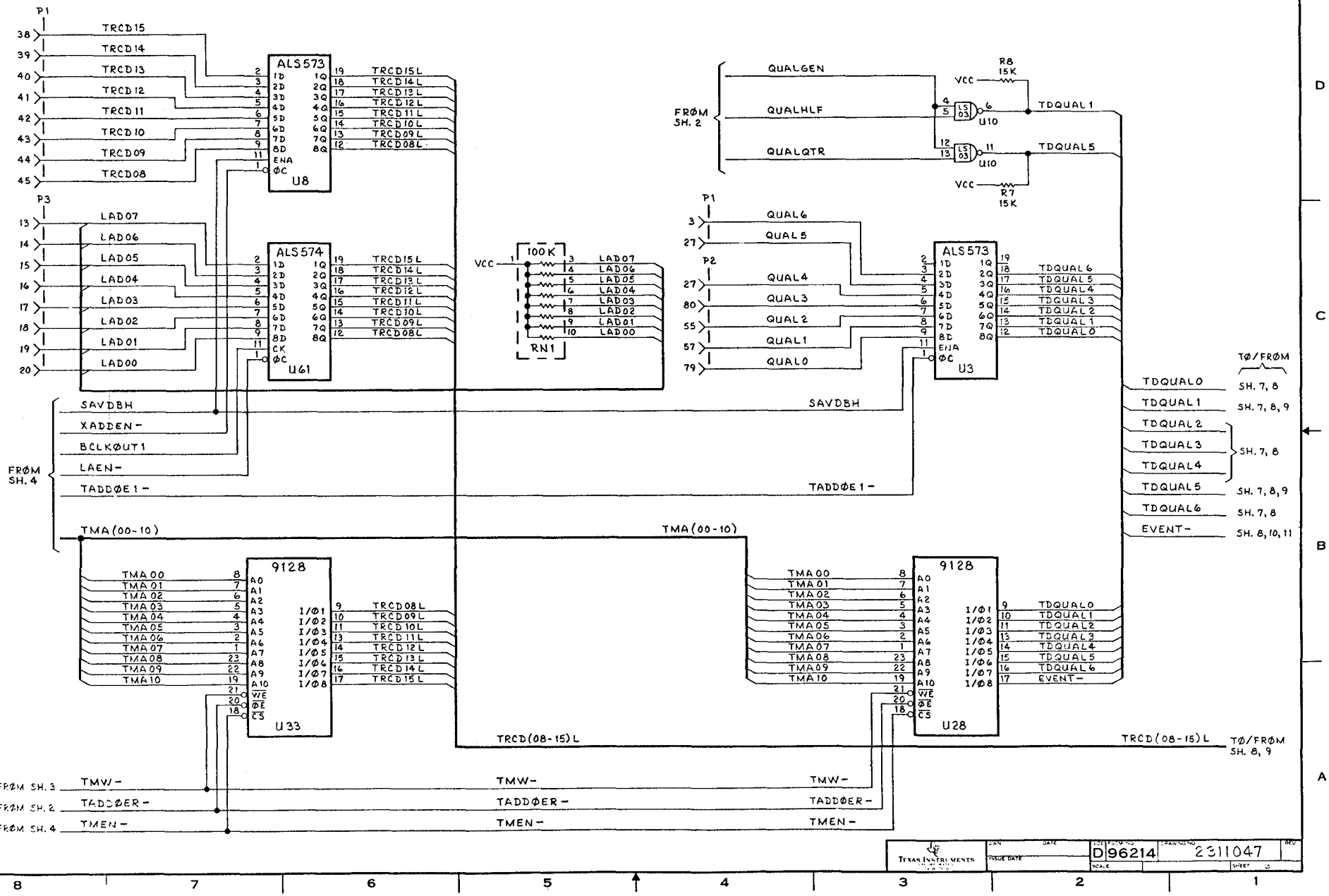

DWG NO 2311047 SH 6
P1
TRCD15
TRCD14
TRCD13
TRCD12
TRCD11
TRCD10
TRCD09
TRCD08
ALS573
U8
TRCD15L
TRCD14L
TRCD13L
TRCD12L
TRCD11L
TRCD10L
TRCD09L
TRCD08L
P3
LAD07
LAD06
LAD05
LAD04
LAD03
LAD02
LAD01
LAD00
ALS574
U61
100K
RN1
VCC
FRØM SH. 2
QUALGEN
QUALHLF
QUALQTR
R8 15K
R7 15K
U10
TDQUAL1
TDQUAL5
P2
QUAL6
QUAL5
QUAL4
QUAL3
QUAL2
QUAL1
QUAL0
ALS573
U3
TDQUAL6
TDQUAL5
TDQUAL4
TDQUAL3
TDQUAL2
TDQUAL1
TDQUAL0
TØ/FRØM
SH. 7, 8
SH. 7, 8, 9
SH. 7, 8
SH. 7, 8, 9
SH. 7, 8
EVENT-
SH. 8, 10, 11
SAVDBH
XADDEN-
BCLKØUT1
LAEN-
TADDØE1-
FRØM SH. 4
TMA(00-10)
9128
U33
TMA00
TMA01
TMA02
TMA03
TMA04
TMA05
TMA06
TMA07
TMA08
TMA09
TMA10
TRCD08L
TRCD09L
TRCD10L
TRCD11L
TRCD12L
TRCD13L
TRCD14L
TRCD15L
U28
TDQUAL0
TDQUAL1
TDQUAL2
TDQUAL3
TDQUAL4
TDQUAL5
TDQUAL6
EVENT-
TRCD(08-15)L
TØ/FRØM SH. 8, 9
FRØM SH. 3
TMW-
FRØM SH. 2
TADDØER-
FRØM SH. 4
TMEN-
TEXAS INSTRUMENTS
D 96214
2311047

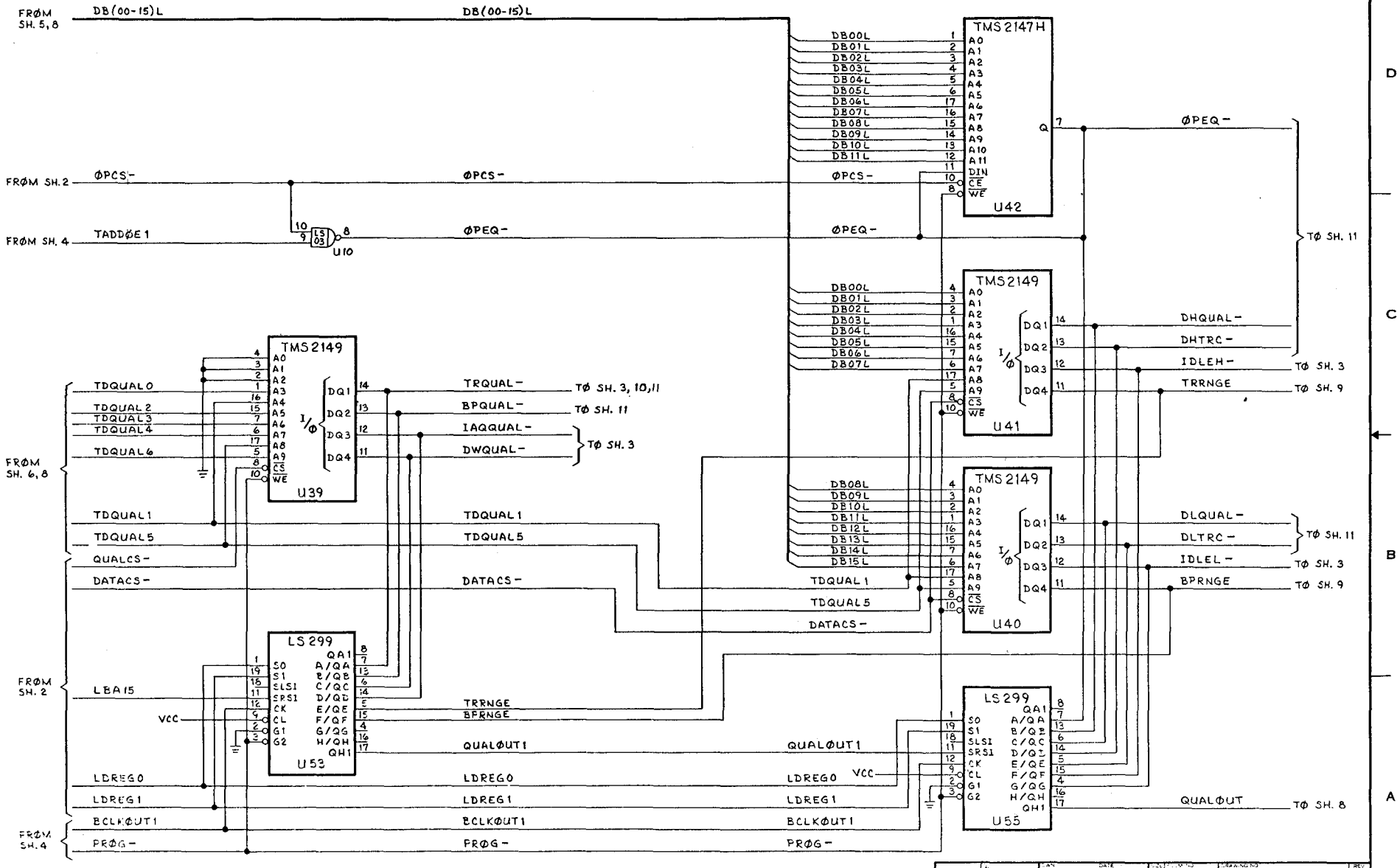

TEXAS INSTRUMENTS

D 96214 2311047 A

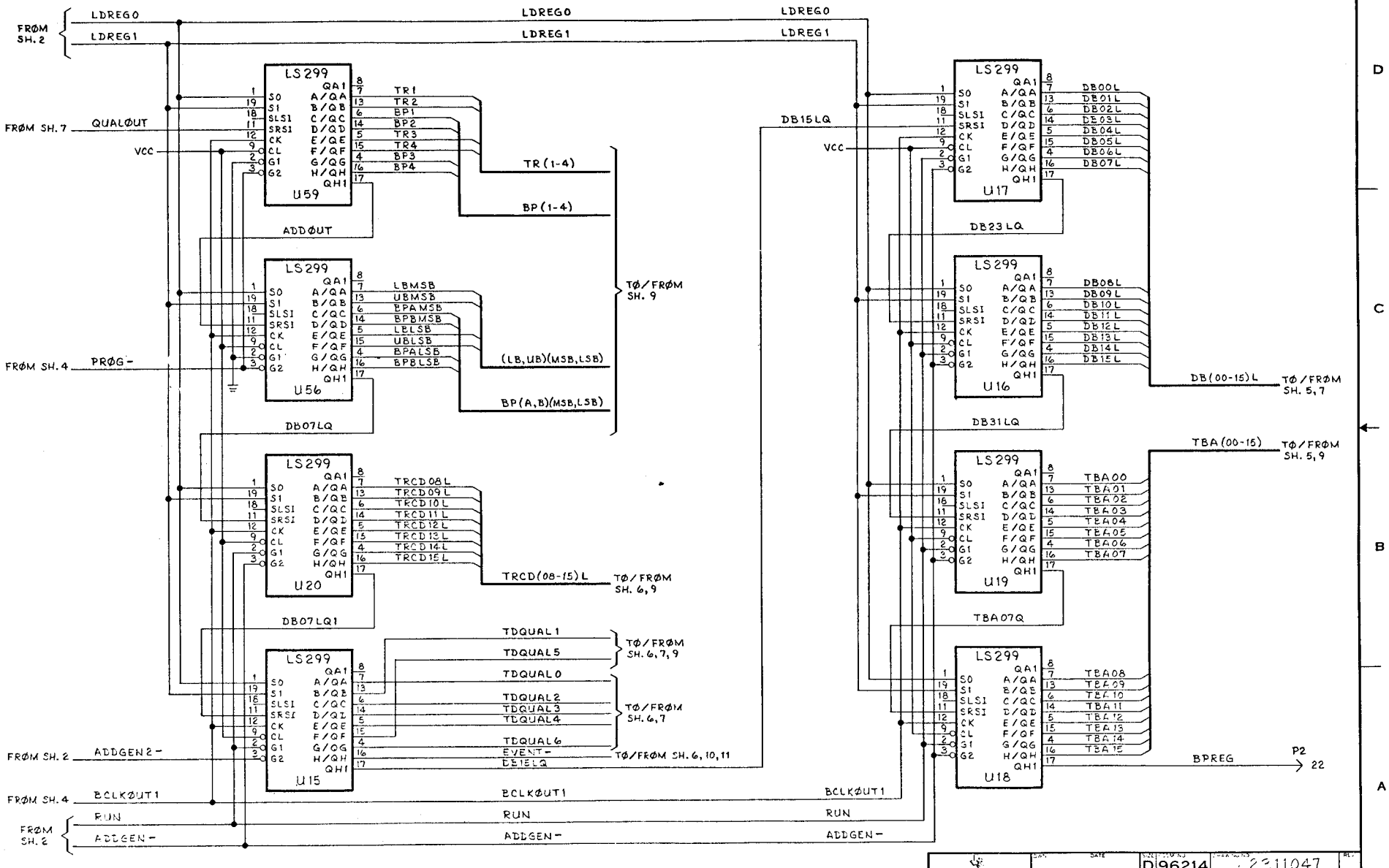
FROM SH. 2
LDREG0
LDREG1
FROM SH. 7
QUALOUT
VCC
FROM SH. 4
PROG-
FROM SH. 2
ADDGEN2-
FROM SH. 4
BCLKOUT1
FROM SH. 2
RUN
ADDGEN-
LS299
U59
U56
U20
U15
U17
U16
U19
U18
TR1
TR2
BP1
BP2
TR3
TR4
BP3
BP4
TR(1-4)
BP(1-4)
ADDOUT
LBMSB
UBMSB
BPAMSB
BPBMSB
LBLSB
UBLSB
BPALSB
BPBLSB
(LB,UB)(MSB,LSB)
BP(A,B)(MSB,LSB)
TØ/FROM SH. 9
DB07LQ
TRCD08L
TRCD09L
TRCD10L
TRCD11L
TRCD12L
TRCD13L
TRCD14L
TRCD15L
TRCD(08-15)L
TØ/FROM SH. 6,9
DB07LQ1
TDQUAL1
TDQUAL5
TØ/FROM SH. 6,7,9
TDQUAL0
TDQUAL2
TDQUAL3
TDQUAL4
TØ/FROM SH. 6,7
TDQUAL6
EVENT-
DB15LQ
TØ/FROM SH. 6,10,11
BCLKOUT1
RUN
ADDGEN-
DB15LQ
DB23LQ
DB31LQ
TBA07Q
DB00L
DB01L
DB02L
DB03L
DB04L
DB05L
DB06L
DB07L
DB08L
DB09L
DB10L
DB11L
DB12L
DB13L
DB14L
DB15L
DB(00-15)L
TØ/FROM SH. 5,7
TBA00
TBA01
TBA02
TBA03
TBA04
TBA05
TBA06
TBA07
TBA(00-15)
TØ/FROM SH. 5,9
TBA08
TBA09
TBA10
TBA11
TBA12
TBA13
TBA14
TBA15
BPREG
P2
22

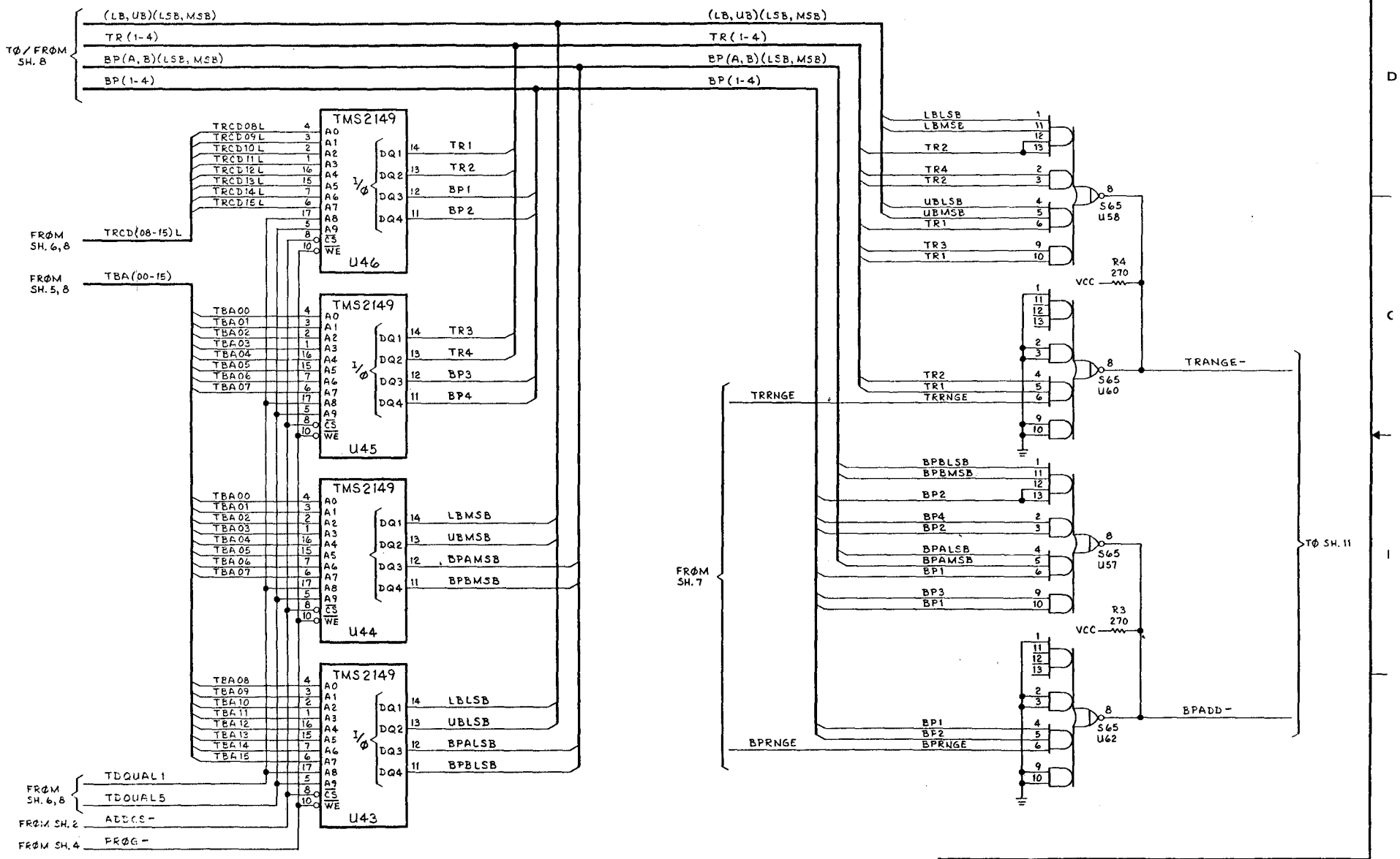
TØ / FRØM SH. 8
(LB, UB)(LSB, MSB)
TR(1-4)
BP(A,B)(LSB, MSB)
BP(1-4)
TMS2149
U46
U45
U44
U43
I/Ø
TRCD08L
TRCD09L
TRCD10L
TRCD11L
TRCD12L
TRCD13L
TRCD14L
TRCD15L
FRØM SH. 6,8
TRCD(08-15)L
FRØM SH. 5,8
TBA(00-15)
TBA00
TBA01
TBA02
TBA03
TBA04
TBA05
TBA06
TBA07
TBA08
TBA09
TBA10
TBA11
TBA12
TBA13
TBA14
TBA15
TDQUAL1
TDQUAL5
FRØM SH. 6,8
FRØM SH. 2
ADDCS-
FRØM SH. 4
PRØG-
TR1
TR2
BP1
BP2
TR3
TR4
BP3
BP4
LBMSB
UBMSB
BPAMSB
BPBMSB
LBLSB
UBLSB
BPALSB
BPBLSB
FRØM SH. 7
TRRNGE
BPRNGE
S65 U58
S65 U60
S65 U57
S65 U62
R4 270
R3 270
VCC
TRANGE-
BPADD-
TØ SH. 11

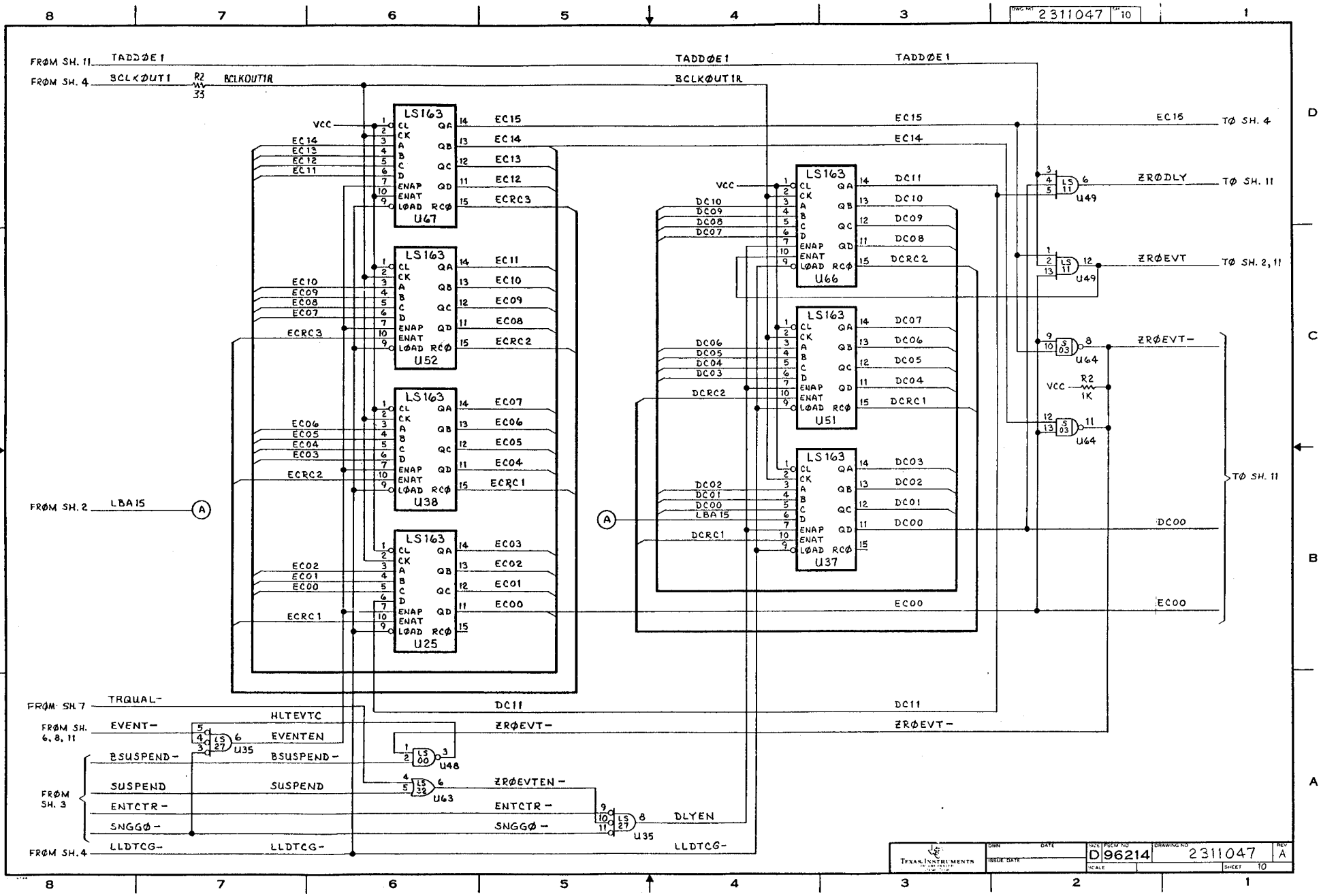
FROM SH. 11 TADDØE1
FROM SH. 4 BCLKØUT1
R2 33
BCLKØUT1R
TADDØE1
BCLKØUT1R
TADDØE1
LS163
U67
U52
U38
U25
U66
U51
U37
VCC
EC15
EC14
EC13
EC12
EC11
EC10
EC09
EC08
EC07
EC06
EC05
EC04
EC03
EC02
EC01
EC00
ECRC3
ECRC2
ECRC1
ECRC0
DC11
DC10
DC09
DC08
DC07
DC06
DC05
DC04
DC03
DC02
DC01
DC00
DCRC2
DCRC1
LBA15
FROM SH. 2 LBA15
FROM SH. 7 TRQUAL-
FROM SH. 6, 8, 11 EVENT-
HLTEVTC
EVENTEN
U35
BSUSPEND-
SUSPEND
ENTCTR-
SNGGØ-
FROM SH. 3
FROM SH. 4 LLDTCG-
ZRØEVTEN-
DLYEN
ZRØDLY
ZRØEVT
ZRØEVT-
U49
U64
U48
U63
R2 1K
TØ SH. 4
TØ SH. 11
TØ SH. 2, 11
TØ SH. 11

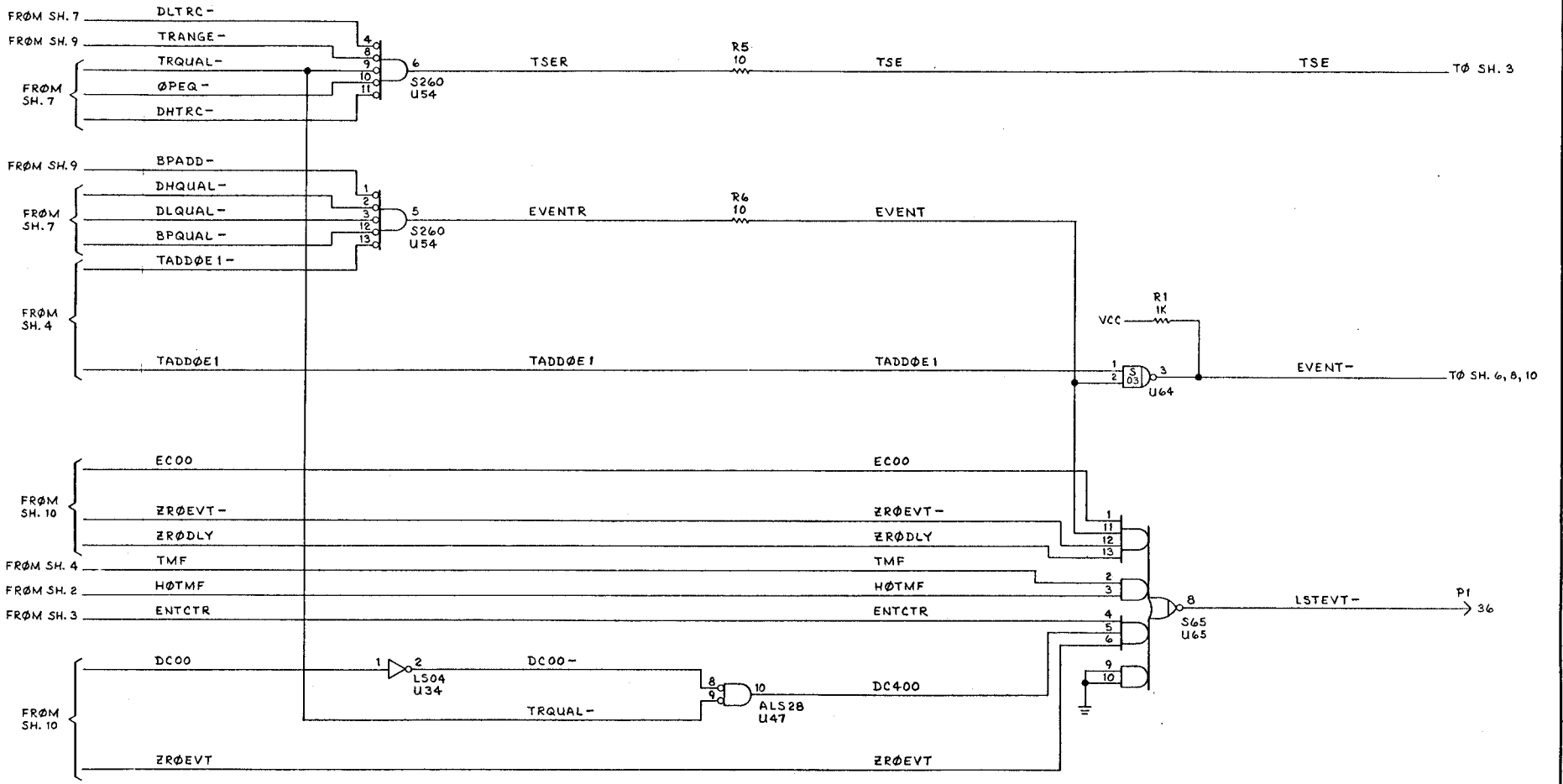
FRØM SH. 7
FRØM SH. 9
FRØM SH. 7
FRØM SH. 9
FRØM SH. 7
FRØM SH. 4
FRØM SH. 10
FRØM SH. 4
FRØM SH. 2
FRØM SH. 3
FRØM SH. 10
DLTRC-
TRANGE-
TRQUAL-
ØPEQ-
DHTRC-
BPADD-
DHQUAL-
DLQUAL-
BPQUAL-
TADDØE1-
TADDØE1
ECØØ
ZRØEVT-
ZRØDLY
TMF
HØTMF
ENTCTR
DCØØ
TRQUAL-
ZRØEVT
S260
U54
S260
U54
TSER
EVENTR
R5
10
R6
10
TSE
EVENT
TADDØE1
ECØØ
ZRØEVT-
ZRØDLY
TMF
HØTMF
ENTCTR
DCØØ-
DC400
ZRØEVT
L504
U34
ALS28
U47
R1
1K
VCC
S
03
U64
S65
U65
TSE
TØ SH. 3
EVENT-
TØ SH. 6, 8, 10
LSTEVT-
P1
36

NOTES: UNLESS OTHERWISE SPECIFIED:

1. ALL DEVICE TYPES ARE PREFIXED WITH SN74.
2. VCC IS APPLIED TØ PIN 8 ØF ALL 8-PIN IC'S, PIN 14 ØF ALL 14-PIN IC'S, PIN 16 ØF ALL 16-PIN IC'S, PIN 20 ØF ALL 20-PIN IC'S, ETC.
3. GRØUND IS APPLIED TØ PIN 4 ØF ALL 8-PIN IC'S, PIN 7 ØF ALL 14-PIN IC'S, PIN 8 ØF ALL 16-PIN IC'S, PIN 10 ØF ALL 20-PIN IC'S, ETC.
4. DEVICE TYPE, PIN NUMBERS, AND REFERENCE DESIGNATØR ØF IC IS SHØWN AS FØLLØWS:

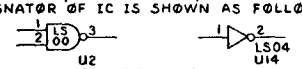

LS00 AND LS04 = DEVICE TYPE
1, 2, AND 3 = PIN NUMBERS
U2 AND U14 = REFERENCE DESIGNATØR

5. RESISTANCE VALUES ARE IN ØHMS.
6. RESISTØRS ARE 1/4 WATT, 5%.
7. CAPACITANCE VALUES ARE IN MICRØFARADS.
8. MSB/LSB DEFINITIØNS:
   A00 = MSB D00 = MSB
   A15 = LSB D15 = LSB

SPARES

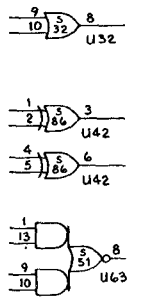

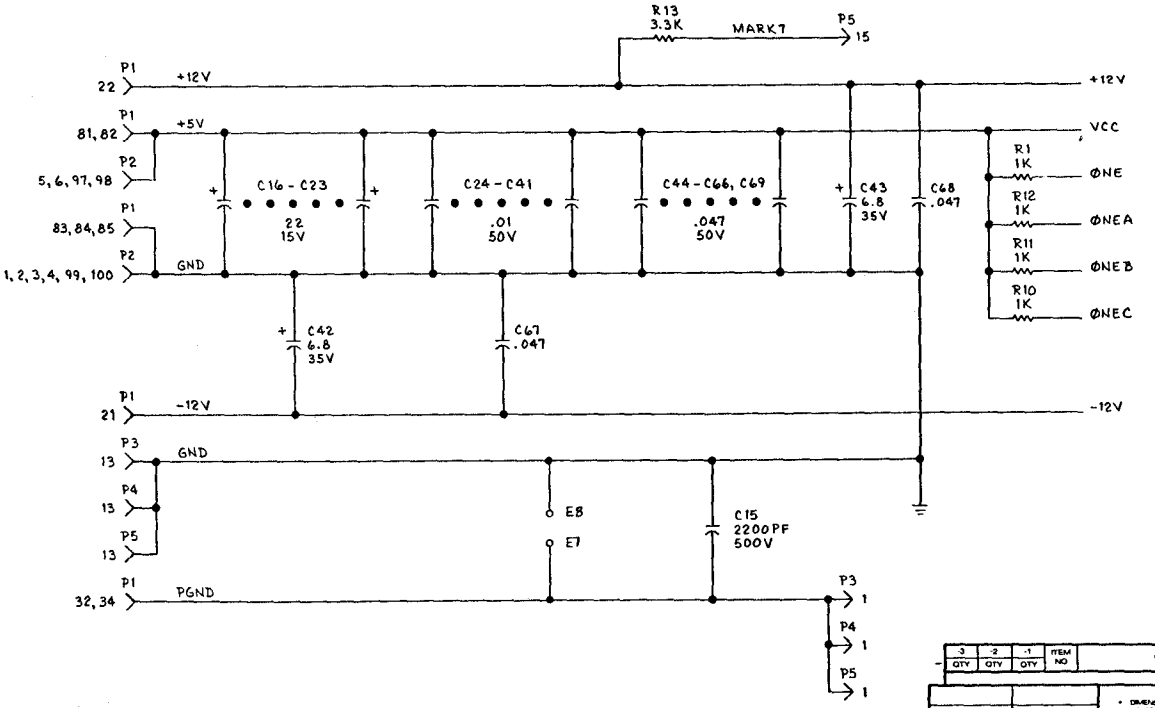

-3 QTY	-2 QTY	-1 QTY	ITEM NO	PART OR IDENTIFYING NUMBER	NOMENCLATURE OR DESCRIPTION	NOTES

PARTS LIST

NEXT ASSY	USED ON
2311050	7119

APPLICATION

UNLESS OTHERWISE SPECIFIED
- DIMENSIONS ARE IN MILLIMETERS
- TOLERANCES 3 PLACE DECIMALS ±0.25, 1 PLACE DECIMALS ±0.5, ANGLES ±1°
- INTERPRET DRAWING PER DOD-D-1000
- REMOVE ALL BURRS AND SHARP EDGES
- CONCENTRICITY MACHINED DIAMETERS 0.25 RM
- DIMENSIONAL LIMITS APPLY BEFORE PROCESSES
- PARENTHETICAL INFO FOR REF ONLY

HOLE TOLERANCE

0.33 THRU 3.18	±0.15-0.03
3.20 THRU 6.35	±0.13-0.03
6.38 THRU 12.70	±0.15-0.03
12.73 THRU 19.06	±0.20-0.03
19.08 THRU 25.40	±0.25-0.33
25.43 THRU 50.80	±0.30-0.03

THIRD ANGLE PROJECTION

DWN C. KEELER DATE 1-27-83
CHK C. KEELER 8-1-83
ENGR 8-2-83
APPLICATION 8-3-83
DR 8-3-83
APPLICATION 8-3-83
REL 8-4-83

TEXAS INSTRUMENTS INCORPORATED
Digital Systems Group

SI-METRIC

LØGIC DIAGRAM, 95/99K MEMØRY EXPANSIØN

SIZE D | FSCM NO 06668 | DRAWING NO 2311052

SCALE 1:2 | SHEET 1 OF 13

SEQ NO	IDENT	F-SPEC	NO	ADDITIONAL	NOTES	REV STATUS OF SHEETS	REV	SH	1	2	3	4	5	6	7	8	9	10	11	12	13
	PROCESS			CLASSIFICATION																	

PROCESSES — FOR CORRELATION TO GOVT. NO SPECIFICATIONS SEE TI DRAWING 729467

DWG NO 2311052 SH 1

REVISIONS

REV	DESCRIPTION	DATE	APPROVED

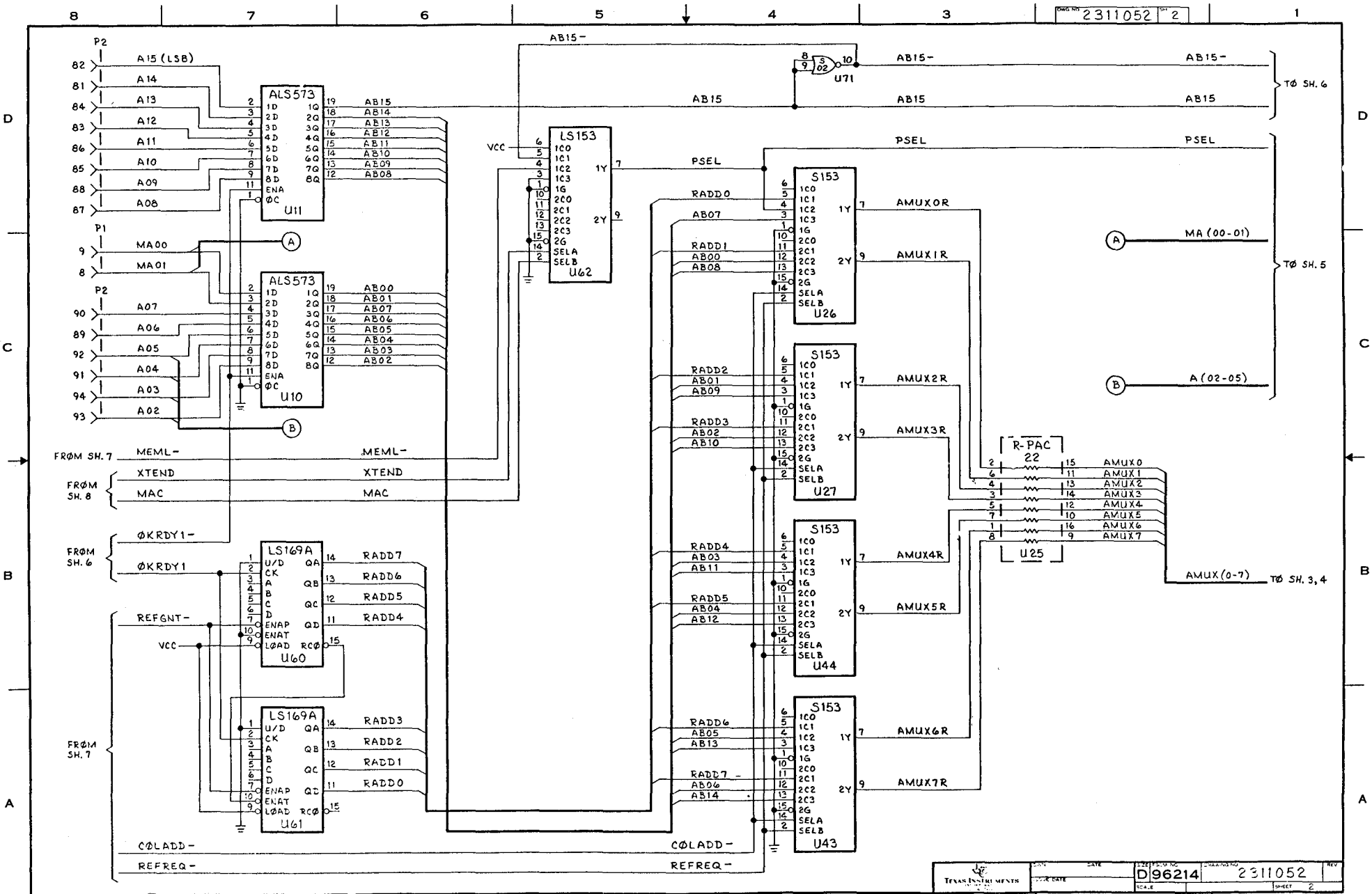
DWG NO 2311052 SH 2
P2
A15 (LSB)
A14
A13
A12
A11
A10
A09
A08
ALS573
U11
P1
MA00
MA01
ALS573
U10
P2
A07
A06
A05
A04
A03
A02
AB15
AB14
AB13
AB12
AB11
AB10
AB09
AB08
AB00
AB01
AB07
AB06
AB05
AB04
AB03
AB02
FROM SH. 7
MEML-
XTEND
MAC
FROM SH. 8
ØKRDY1-
ØKRDY1
FROM SH. 6
REFGNT-
VCC
LS169A
U60
LS169A
U61
FROM SH. 7
RADD7
RADD6
RADD5
RADD4
RADD3
RADD2
RADD1
RADD0
CØLADD-
REFREQ-
LS153
U62
VCC
PSEL
AB15-
U71
AB15
TØ SH. 6
PSEL
TØ SH. 5
MA (00-01)
A (02-05)
S153
U26
S153
U27
S153
U44
S153
U43
RADD0
AB07
RADD1
AB00
AB08
RADD2
AB01
AB09
RADD3
AB02
AB10
RADD4
AB03
AB11
RADD5
AB04
AB12
RADD6
AB05
AB13
RADD7
AB06
AB14
AMUX0R
AMUX1R
AMUX2R
AMUX3R
AMUX4R
AMUX5R
AMUX6R
AMUX7R
R-PAC
22
U25
AMUX0
AMUX1
AMUX2
AMUX3
AMUX4
AMUX5
AMUX6
AMUX7
AMUX(0-7)
TØ SH. 3, 4
TEXAS INSTRUMENTS
D 96214
2311052
SHEET 2

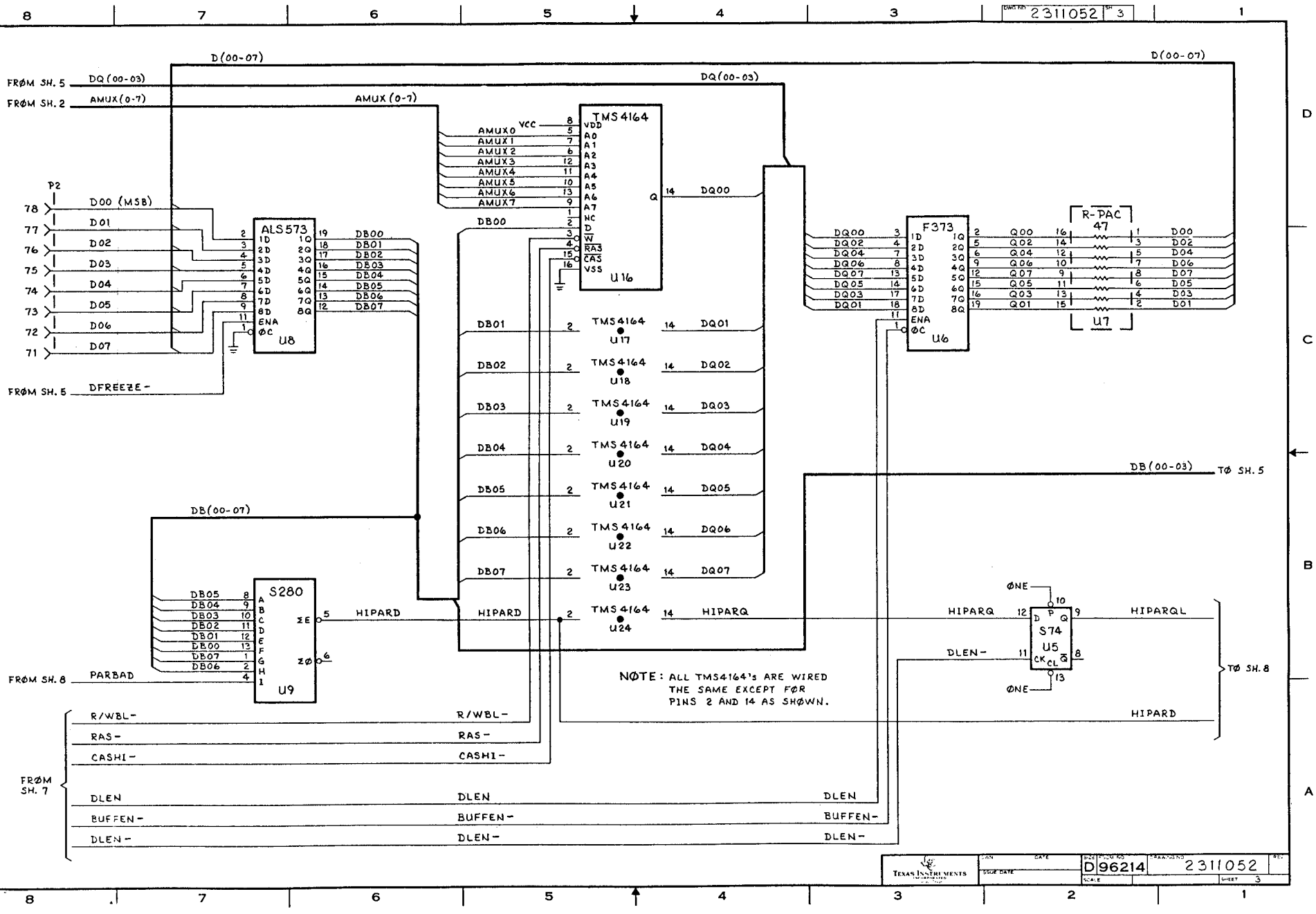
DWG NO. 2311052 SH 3
D(00-07)
FROM SH. 5 DQ(00-03)
FROM SH. 2 AMUX(0-7)
AMUX(0-7)
DQ(00-03)
D(00-07)
P2
78 D00 (MSB)
77 D01
76 D02
75 D03
74 D04
73 D05
72 D06
71 D07
ALS573
U8
DB00
DB01
DB02
DB03
DB04
DB05
DB06
DB07
FROM SH. 5 DFREEZE-
VCC
AMUX0
AMUX1
AMUX2
AMUX3
AMUX4
AMUX5
AMUX6
AMUX7
TMS4164
U16
DQ00
DB00
DB01
DB02
DB03
DB04
DB05
DB06
DB07
TMS4164
U17
U18
U19
U20
U21
U22
U23
U24
DQ01
DQ02
DQ03
DQ04
DQ05
DQ06
DQ07
HIPARQ
F373
U6
R-PAC
47
U7
DB(00-03) TØ SH. 5
DB(00-07)
S280
U9
DB05
DB04
DB03
DB02
DB01
DB00
DB07
DB06
ΣE
ΣØ
HIPARD
FROM SH. 8 PARBAD
NOTE: ALL TMS4164's ARE WIRED THE SAME EXCEPT FØR PINS 2 AND 14 AS SHØWN.
ØNE
S74
U5
HIPARQL
DLEN-
TØ SH. 8
FROM SH. 7
R/WBL-
RAS-
CASHI-
DLEN
BUFFEN-
DLEN-
TEXAS INSTRUMENTS
D 96214
2311052
SCALE
SHEET 3
A-16

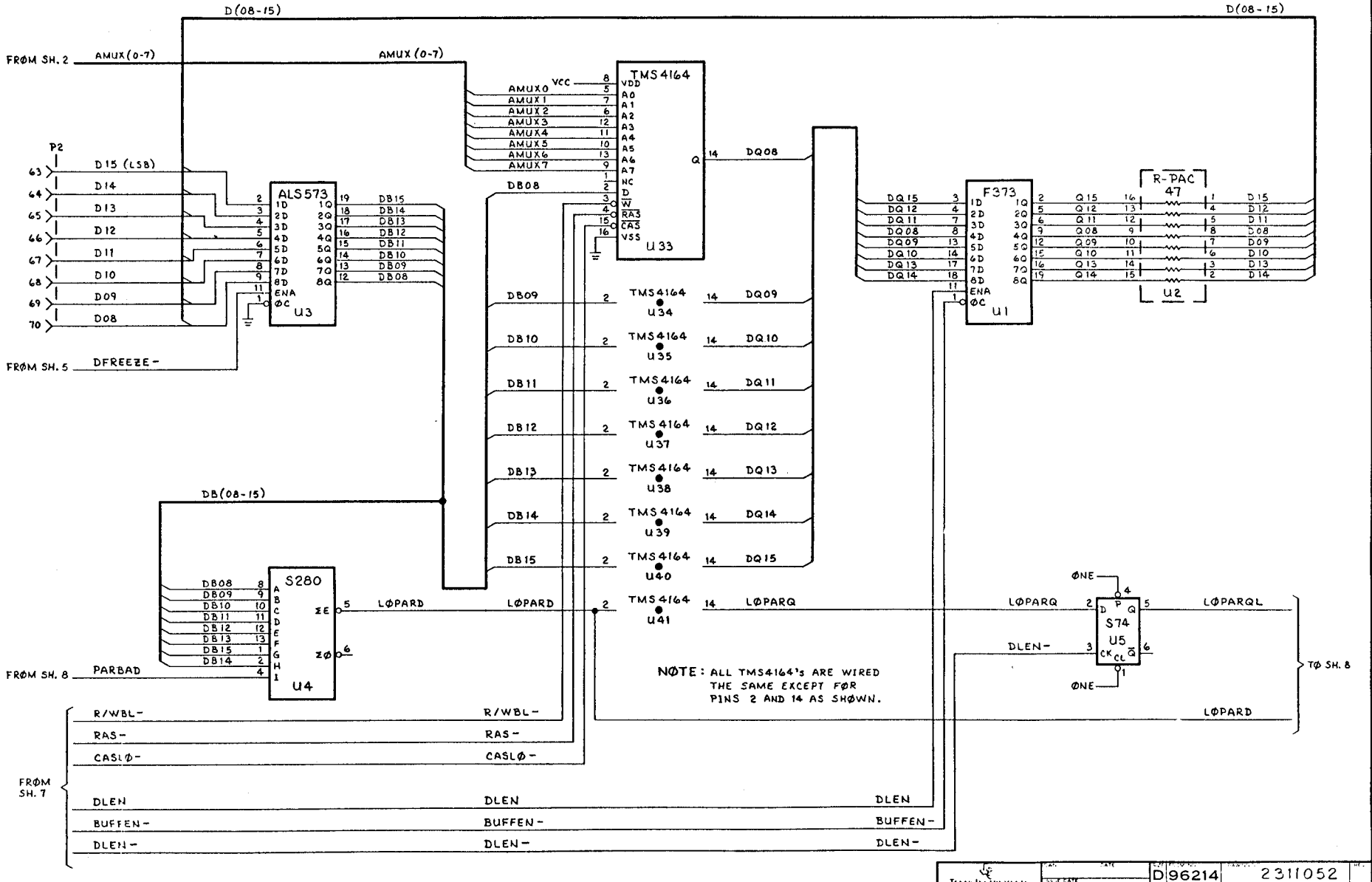
D(08-15)
FROM SH. 2
AMUX(0-7)
AMUX (0-7)
P2
D15 (LSB)
D14
D13
D12
D11
D10
D09
D08
ALS573
U3
FROM SH. 5
DFREEZE-
TMS4164
VCC
AMUX0
AMUX1
AMUX2
AMUX3
AMUX4
AMUX5
AMUX6
AMUX7
DB08
U33
DQ08
DB09
U34
DQ09
DB10
U35
DQ10
DB11
U36
DQ11
DB12
U37
DQ12
DB13
U38
DQ13
DB14
U39
DQ14
DB15
U40
DQ15
LØPARD
U41
LØPARQ
F373
U1
R-PAC
47
U2
DB(08-15)
S280
U4
FROM SH. 8
PARBAD
NOTE: ALL TMS4164's ARE WIRED THE SAME EXCEPT FØR PINS 2 AND 14 AS SHØWN.
ØNE
S74
U5
LØPARQL
DLEN-
TØ SH. 8
FROM SH. 7
R/WBL-
RAS-
CASLØ-
DLEN
BUFFEN-
DLEN-

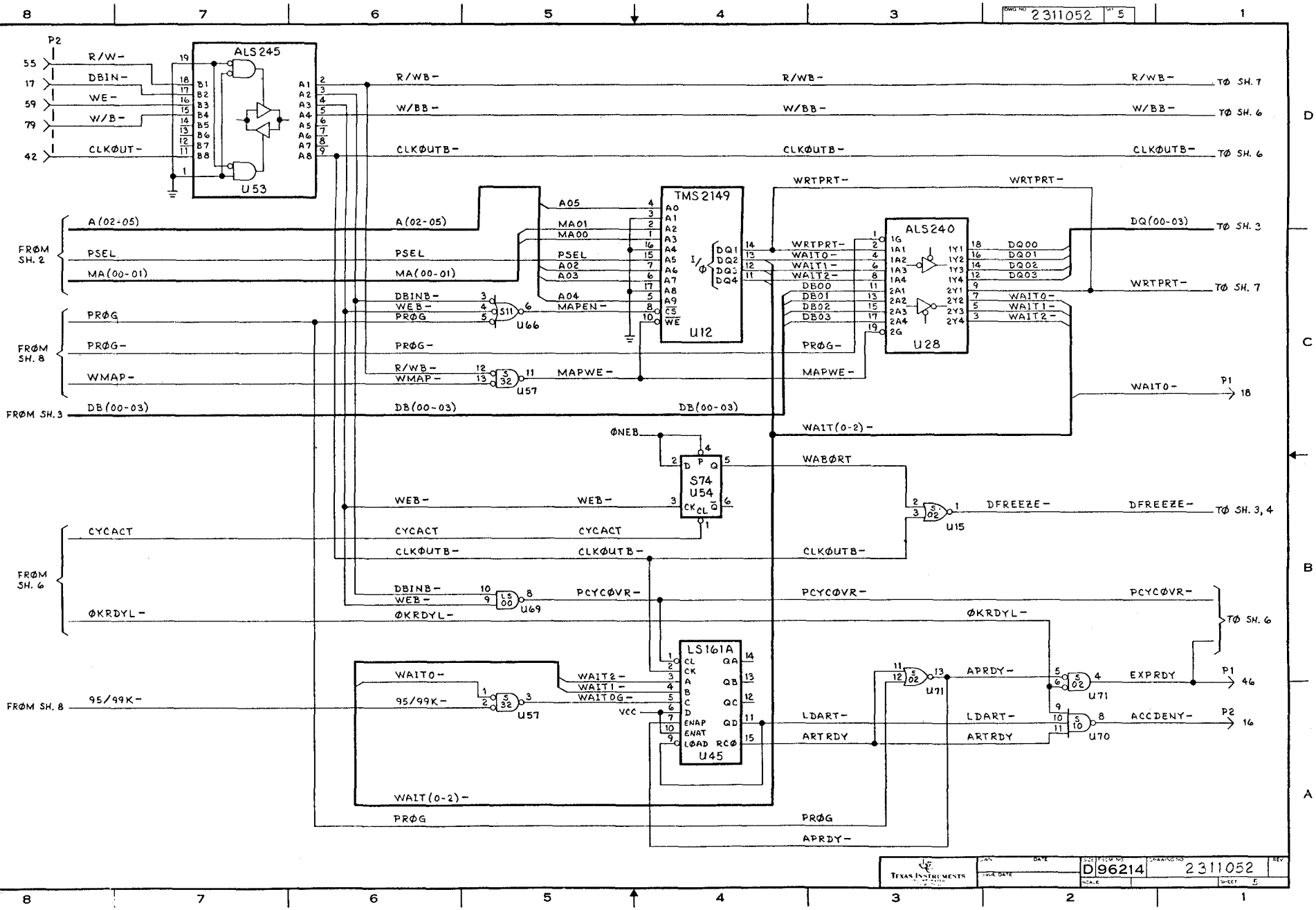
DWG NO 2311052 ST 5
P2
55 R/W-
17 DBIN-
59 WE-
79 W/B-
42 CLKØUT-
ALS245
U53
R/WB-
W/BB-
CLKØUTB-
TØ SH. 7
TØ SH. 6
TØ SH. 6
FROM SH. 2
A(02-05)
PSEL
MA(00-01)
TMS 2149
U12
A05
MA01
MA00
PSEL
A02
A03
A04
MAPEN-
WRTPRT-
WAIT0-
WAIT1-
WAIT2-
DB00
DB01
DB02
DB03
ALS240
U28
DQ(00-03)
TØ SH. 3
WRTPRT-
TØ SH. 7
FROM SH. 8
PRØG
PRØG-
WMAP-
DBINB-
WEB-
S11
U66
R/WB-
WMAP-
S32
U57
MAPWE-
WAIT0-
P1
18
FROM SH. 3
DB(00-03)
WAIT(0-2)-
ØNEB
S74
U54
WABØRT
WEB-
CYCACT
CLKØUTB-
S02
U15
DFREEZE-
TØ SH. 3, 4
FROM SH. 6
DBINB-
WEB-
LS00
U69
PCYCØVR-
ØKRDYL-
TØ SH. 6
LS161A
U45
WAIT0-
95/99K-
FROM SH. 8
WAIT2-
WAIT1-
WAIT0G-
VCC
ENAP
ENAT
LOAD
RCØ
S32
U57
APRDY-
S02
U71
EXPRDY
P1
46
LDART-
ARTRDY
S10
U70
ACCDENY-
P2
16
PRØG
APRDY-
TEXAS INSTRUMENTS
D 96214
2311052
SHEET 5
A-18

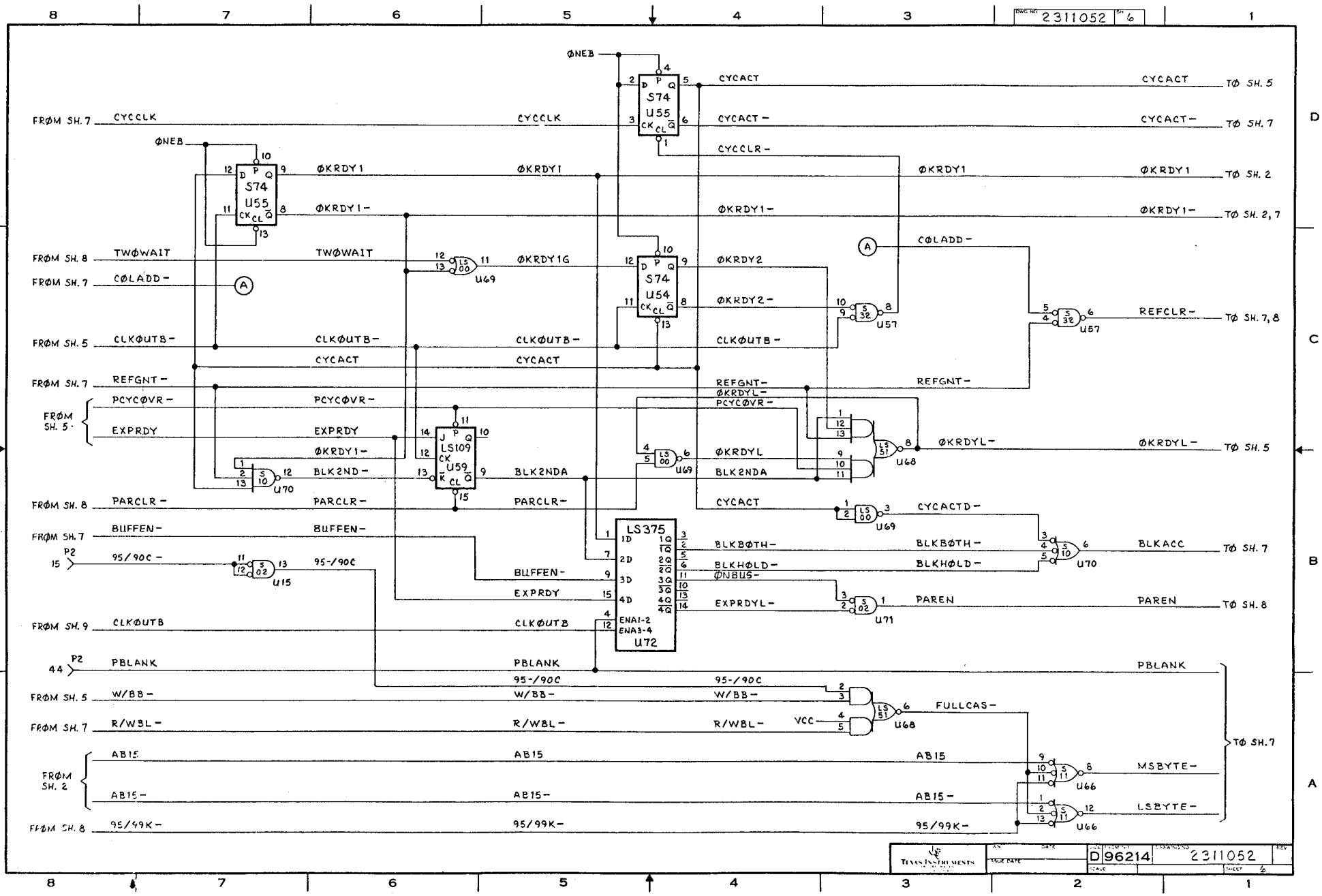

2311052 6
ØNEB
S74 U55
S74 U54
LS109 U59
LS375 U72
CYCACT
CYCACT-
CYCCLR-
CYCCLK
ØKRDY1
ØKRDY1-
ØKRDY1G
ØKRDY2
ØKRDY2-
CØLADD-
TWØWAIT
CLKØUTB-
REFGNT-
PCYCØVR-
EXPRDY
BLK2ND-
BLK2NDA
ØKRDYL
ØKRDYL-
PARCLR-
BUFFEN-
95/90C-
95-/90C
BLKBØTH-
BLKHØLD-
ØNBUS-
EXPRDYL-
CYCACTD-
BLKACC
PAREN
CLKØUTB
PBLANK
W/BB-
R/WBL-
FULLCAS-
VCC
AB15
AB15-
95/99K-
MSBYTE-
LSBYTE-
REFCLR-
FRØM SH. 7
FRØM SH. 8
FRØM SH. 5
FRØM SH. 9
FRØM SH. 2
TØ SH. 5
TØ SH. 7
TØ SH. 2
TØ SH. 2, 7
TØ SH. 7, 8
TØ SH. 8
TEXAS INSTRUMENTS
D 96214
2311052

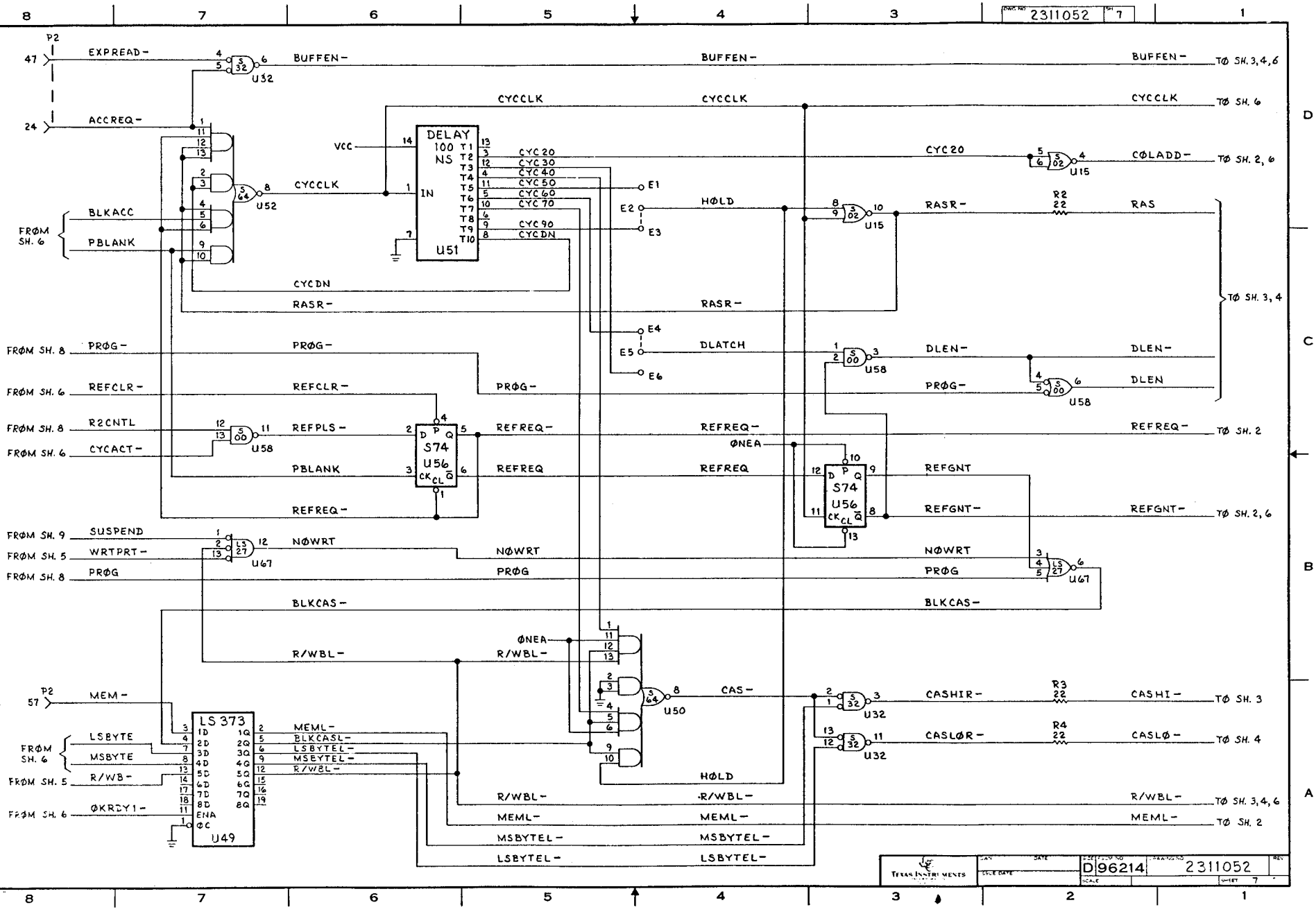
2311052
7
P2
47
EXPREAD-
BUFFEN-
U32
TØ SH. 3,4,6
24
ACCREQ-
CYCCLK
TØ SH. 6
DELAY
100 NS
U51
VCC
IN
CYC20
CYC30
CYC40
CYC50
CYC60
CYC70
CYC90
CYCDN
E1
E2
E3
E4
E5
E6
CØLADD-
TØ SH. 2, 6
U15
U52
FRØM SH. 6
BLKACC
PBLANK
HØLD
RASR-
R2
22
RAS
TØ SH. 3, 4
FRØM SH. 8
PRØG-
DLATCH
DLEN-
U58
FRØM SH. 6
REFCLR-
FRØM SH. 8
R2CNTL
FRØM SH. 6
CYCACT-
REFPLS-
REFREQ-
ØNEA
REFREQ
TØ SH. 2
S74
U56
REFGNT
REFGNT-
TØ SH. 2, 6
FRØM SH. 9
SUSPEND
FRØM SH. 5
WRTPRT-
FRØM SH. 8
PRØG
NØWRT
U67
BLKCAS-
R/WBL-
P2
57
MEM-
LS 373
U49
LSBYTE
MSBYTE
FRØM SH. 5
R/WB-
FRØM SH. 6
ØKRDY1-
MEML-
BLKCASL-
LSBYTEL-
MSBYTEL-
R/WBL-
U50
CAS-
CASHIR-
R3
22
CASHI-
TØ SH. 3
CASLØR-
R4
22
CASLØ-
TØ SH. 4
R/WBL-
TØ SH. 3,4,6
MEML-
TØ SH. 2
MSBYTEL-
LSBYTEL-
TEXAS INSTRUMENTS
D
96214
2311052
SHEET 7

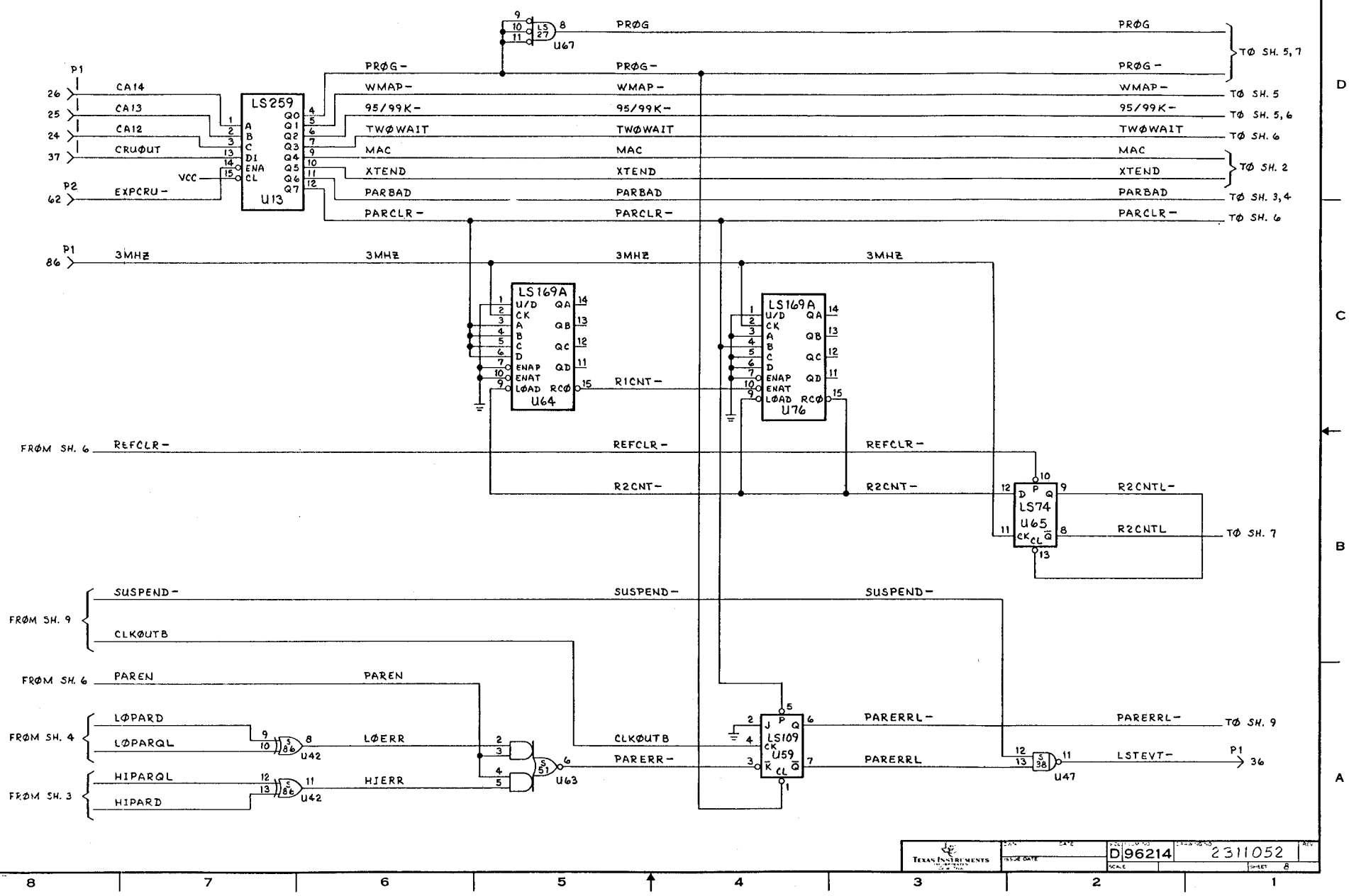
PRØG
PRØG-
WMAP-
95/99K-
TWØWAIT
MAC
XTEND
PARBAD
PARCLR-
CA14
CA13
CA12
CRUØUT
EXPCRU-
VCC
LS259
U13
3MHZ
LS169A
U64
U76
R1CNT-
R2CNT-
REFCLR-
LS74
U65
R2CNTL-
R2CNTL
SUSPEND-
CLKØUTB
PAREN
LØPARD
LØPARQL
HIPARQL
HIPARD
LØERR
HIERR
PARERR-
LS109
U59
PARERRL-
PARERRL
LSTEVT-
LS27
U67
LS86
U42
LS51
U63
LS38
U47
TØ SH. 5, 7
TØ SH. 5
TØ SH. 5, 6
TØ SH. 6
TØ SH. 2
TØ SH. 3, 4
TØ SH. 9
FROM SH. 6
FROM SH. 9
FROM SH. 4
FROM SH. 3
P1
P2

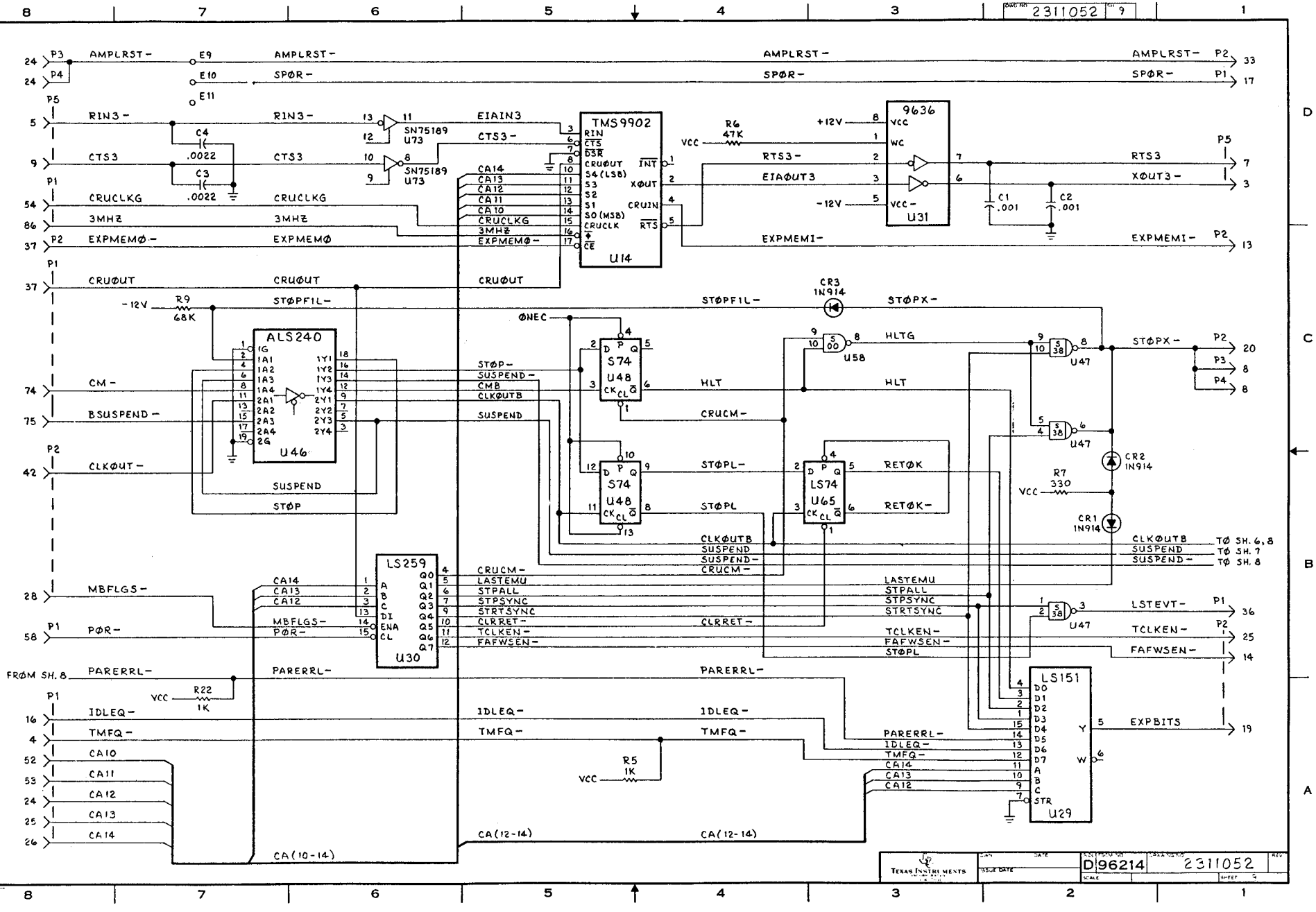

2311052
9
AMPLRST-
SPØR-
RIN3-
CTS3
CRUCLKG
3MHZ
EXPMEMØ-
CRUØUT
STØPF1L-
CM-
BSUSPEND-
CLKØUT-
MBFLGS-
PØR-
FRØM SH. 8
PARERRL-
IDLEQ-
TMFQ-
CA10
CA11
CA12
CA13
CA14
SN75189
U73
EIAIN3
CTS3-
TMS9902
U14
R6
47K
VCC
RTS3-
EIAØUT3
EXPMEMI-
9636
U31
C1
.001
C2
.001
RTS3
XØUT3-
R9
68K
ALS240
U46
STØP-
SUSPEND-
CMB
CLKØUTB
SUSPEND
ØNEC
S74
U48
HLT
CRUCM-
STØPL-
STØPL
CR3
1N914
STØPX-
HLTG
U58
U47
LS74
U65
RETØK
RETØK-
CR2
1N914
R7
330
CR1
1N914
CLKØUTB
SUSPEND
SUSPEND-
CRUCM-
TØ SH. 6, 8
TØ SH. 7
TØ SH. 8
LS259
U30
LASTEMU
STPALL
STPSYNC
STRTSYNC
CLRRET-
TCLKEN-
FAFWSEN-
LSTEVT-
TCLKEN-
FAFWSEN-
LS151
U29
EXPBITS
R22
1K
R5
1K
CA(10-14)
CA(12-14)
TEXAS INSTRUMENTS
D
96214
2311052

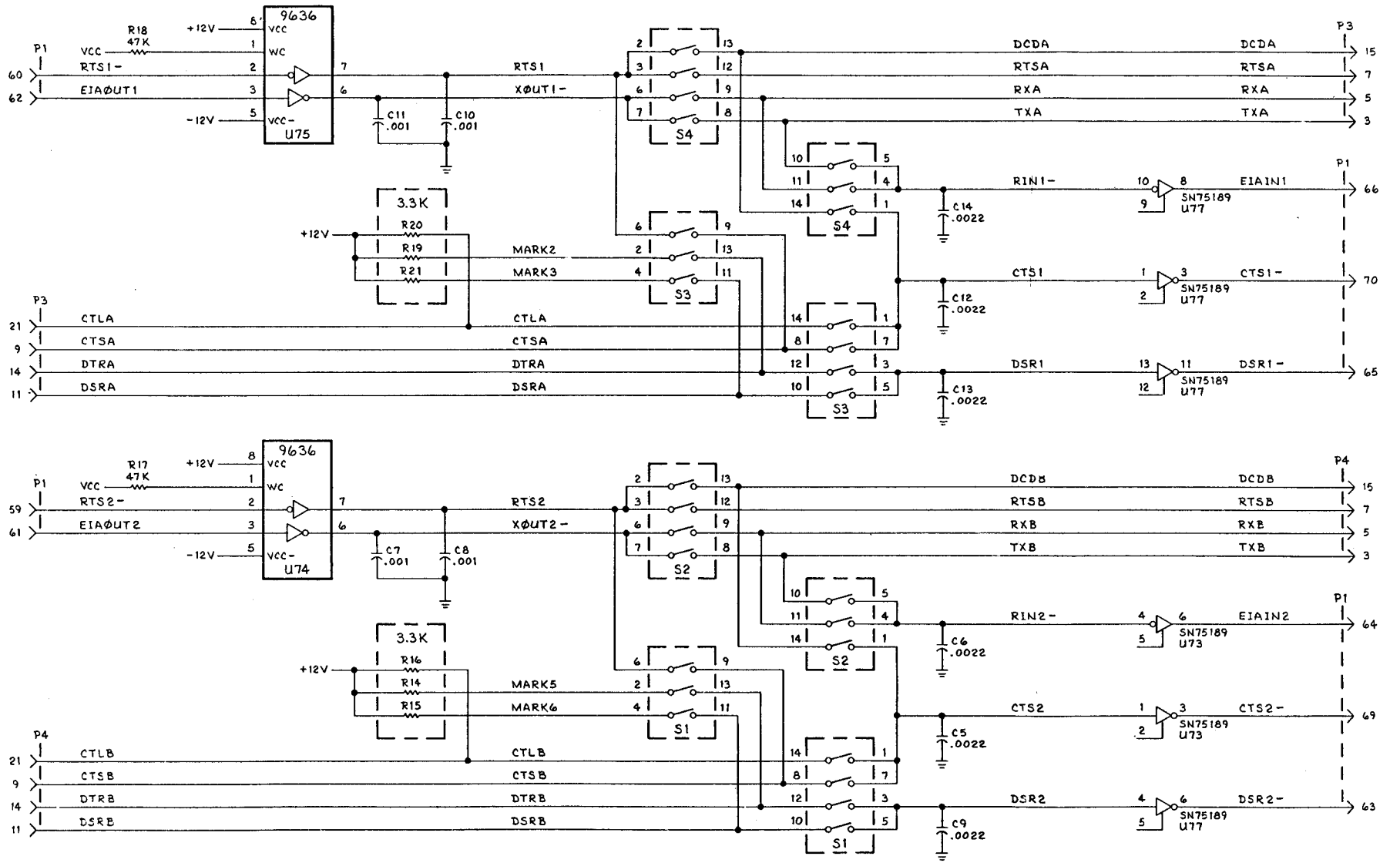
9636
U75
R18
47K
+12V
-12V
VCC
RTS1-
EIAØUT1
RTS1
XØUT1-
C11
.001
C10
.001
S4
S3
3.3K
R20
R19
R21
MARK2
MARK3
CTLA
CTSA
DTRA
DSRA
DCDA
RTSA
RXA
TXA
RIN1-
CTS1
DSR1
C14
.0022
C12
.0022
C13
.0022
SN75189
U77
EIAIN1
CTS1-
DSR1-
9636
U74
R17
47K
RTS2-
EIAØUT2
RTS2
XØUT2-
C7
.001
C8
.001
S2
S1
R16
R14
R15
MARK5
MARK6
CTLB
CTSB
DTRB
DSRB
DCDB
RTSB
RXB
TXB
RIN2-
CTS2
DSR2
C6
.0022
C5
.0022
C9
.0022
SN75189
U73
EIAIN2
CTS2-
DSR2-
P1
P3
P4

DWG NO 2311042 SH 1

REV	DESCRIPTION	DATE	APPROVED
A	CN 512822 (C) D. [illegible]	12-2-83	C. KEELER

NOTES: UNLESS OTHERWISE SPECIFIED:

1. ALL DEVICE TYPES ARE PREFIXED WITH SN74.
2. VCC IS APPLIED TØ PIN 8 ØF ALL 8-PIN IC'S, PIN 14 ØF ALL 14-PIN IC'S, PIN 16 ØF ALL 16-PIN IC'S, PIN 20 ØF ALL 20-PIN IC'S, ETC.
3. GRØUND IS APPLIED TØ PIN 4 ØF ALL 8-PIN IC'S, PIN 7 ØF ALL 14-PIN IC'S, PIN 8 ØF ALL 16-PIN IC'S, PIN 10 ØF ALL 20-PIN IC'S, ETC.
4. DEVICE TYPE, PIN NUMBERS, AND REFERENCE DESIGNATØR ØF IC IS SHØWN AS FØLLØWS:

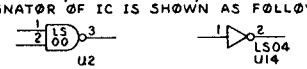

LS00 AND LS04 = DEVICE TYPE
1, 2, AND 3 = PIN NUMBERS
U2 AND U14 = REFERENCE DESIGNATØR

5. RESISTANCE VALUES ARE IN ØHMS.
6. RESISTØRS ARE 1/4 WATT, 5%.
7. CAPACITANCE VALUES ARE IN MICRØFARADS.
8. MSB/LSB DEFINITIØNS:
   A00 = MSB
   A15 = LSB

9. FØR REV B ASSY, JUMPER DØES NØT EXIST. FUNCTIØN IS HARD WIRED TØ SELECT E4-E5.

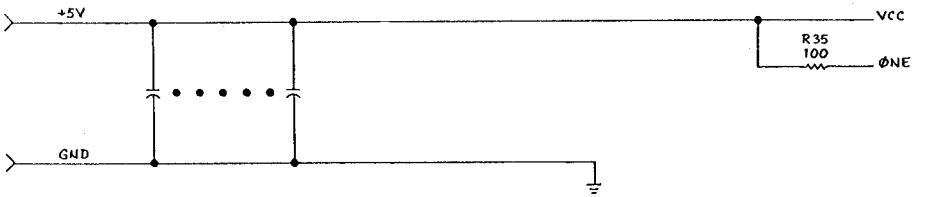

-3 QTY	-2 QTY	-1 QTY	ITEM NO	PART OR IDENTIFYING NUMBER	NOMENCLATURE OR DESCRIPTION	NOTES

PARTS LIST

UNLESS OTHERWISE SPECIFIED
- DIMENSIONS ARE IN MILLIMETERS
- TOLERANCES: 2 PLACE DECIMALS ±0.25, 1 PLACE DECIMALS ±0.5, ANGLES ±1°
- INTERPRET DRAWING PER DOD-D-1000
- REMOVE ALL BURRS AND SHARP EDGES
- CONCENTRICITY MACHINED DIAMETERS 0.25 FIM
- DIMENSIONAL LIMITS APPLY BEFORE PROCESSES
- PARENTHETICAL INFO FOR REF ONLY

HOLE TOLERANCE

0.33 THRU 3.18	±0.10/-0.03
3.20 THRU 6.35	±0.13/-0.03
6.38 THRU 12.70	±0.15/-0.03
12.73 THRU 19.35	±0.20/-0.03
19.38 THRU 25.40	±0.25/-0.03
25.43 THRU 50.80	±0.30/-0.03

THIRD ANGLE PROJECTION

NEXT ASSY	USED ON
2311040	7119

APPLICATION

DWN [illegible] DATE 2-9-82
CHK C. KEELER 4-4-83
ENGR [illegible] 7-6-83
APVD ENGR [illegible] 7-8-83
QA [illegible]
APVD MFG [illegible]
RLSE [illegible] 8-3-83

TEXAS INSTRUMENTS INCORPORATED Digital Systems Group

SI-METRIC

LOGIC DIAGRAM, TMS9995/6 EMULATOR PC CARD

SIZE D FSCM NO 06668 DRAWING NO 2311042

SCALE [illegible] SHEET [illegible]

SEQ NO	IDENT	F SPEC	NO	ADDITIONAL	NOTES
	PROCESS			CLASSIFICATION	

PROCESSES — FOR CORRELATION TO DOD STANDARD SPECIFICATIONS, SEE TI DRAWING 729467

REV STATUS OF SHEETS

REV	A			A	A	A	A		
SH	1	2	3	4	5	6	7	8	9

43

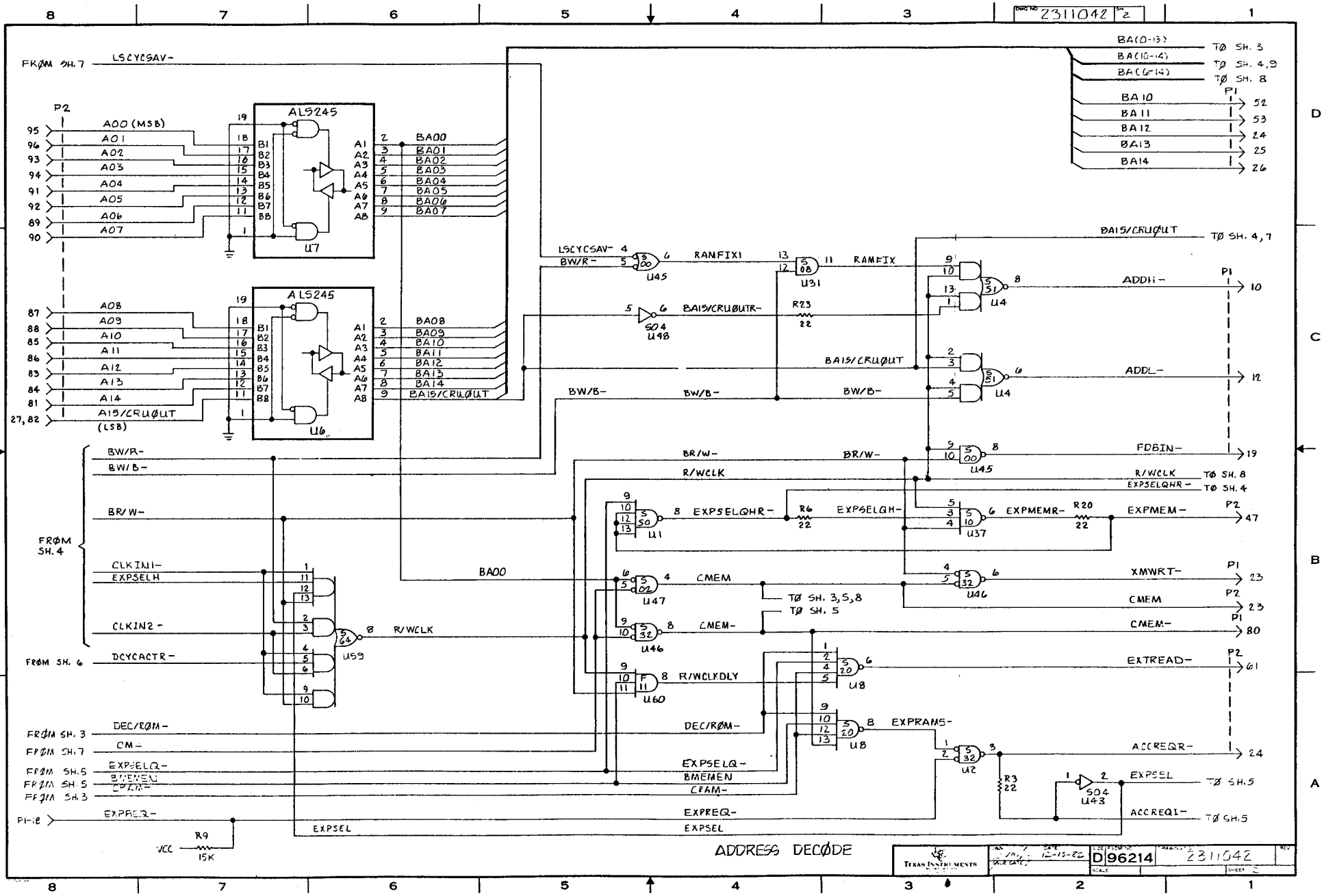

2311042
FRØM SH.7
LSCYCSAV-
BA(0-13)
TØ SH. 3
BA(10-14)
TØ SH. 4,9
BA(6-14)
TØ SH. 8
BA10
BA11
BA12
BA13
BA14
P1
P2
A00 (MSB)
A01
A02
A03
A04
A05
A06
A07
A08
A09
A10
A11
A12
A13
A14
A15/CRUØUT
(LSB)
ALS245
U7
U6
BA00
BA01
BA02
BA03
BA04
BA05
BA06
BA07
BA08
BA09
BA10
BA11
BA12
BA13
BA14
BA15/CRUØUT
LSCYCSAV-
BW/R-
RAMFIX1
RAMFIX
U45
U31
U4
BA15/CRUØUTR-
R23
22
S04
U48
BA15/CRUØUT
BW/B-
ADDH-
ADDL-
FDBIN-
BW/R-
BW/B-
BR/W-
R/WCLK
EXPSELQHR-
TØ SH. 8
TØ SH. 4
EXPSELQH-
EXPMEMR-
R20
EXPMEM-
U1
U37
FRØM SH. 4
CLKIN1-
EXPSELH
CLKIN2-
DCYCACTR-
FRØM SH. 6
BA00
CMEM
TØ SH. 3,5,8
TØ SH. 5
XMWRT-
CMEM-
U47
U46
U59
R/WCLK
R/WCLKDLY
U60
U8
EXTREAD-
EXPRAMS-
DEC/RØM-
FRØM SH. 3
CM-
FRØM SH. 7
EXPSELQ-
FRØM SH. 5
BMEMEN
CRAM-
FRØM SH. 3
EXPREQ-
EXPSEL
ACCREQR-
U2
R3
22
S04
U43
EXPSEL
TØ SH. 5
ACCREQI-
TØ SH. 5
VCC
R9
15K
ADDRESS DECØDE
TEXAS INSTRUMENTS
12-15-82
D 96214
2311042

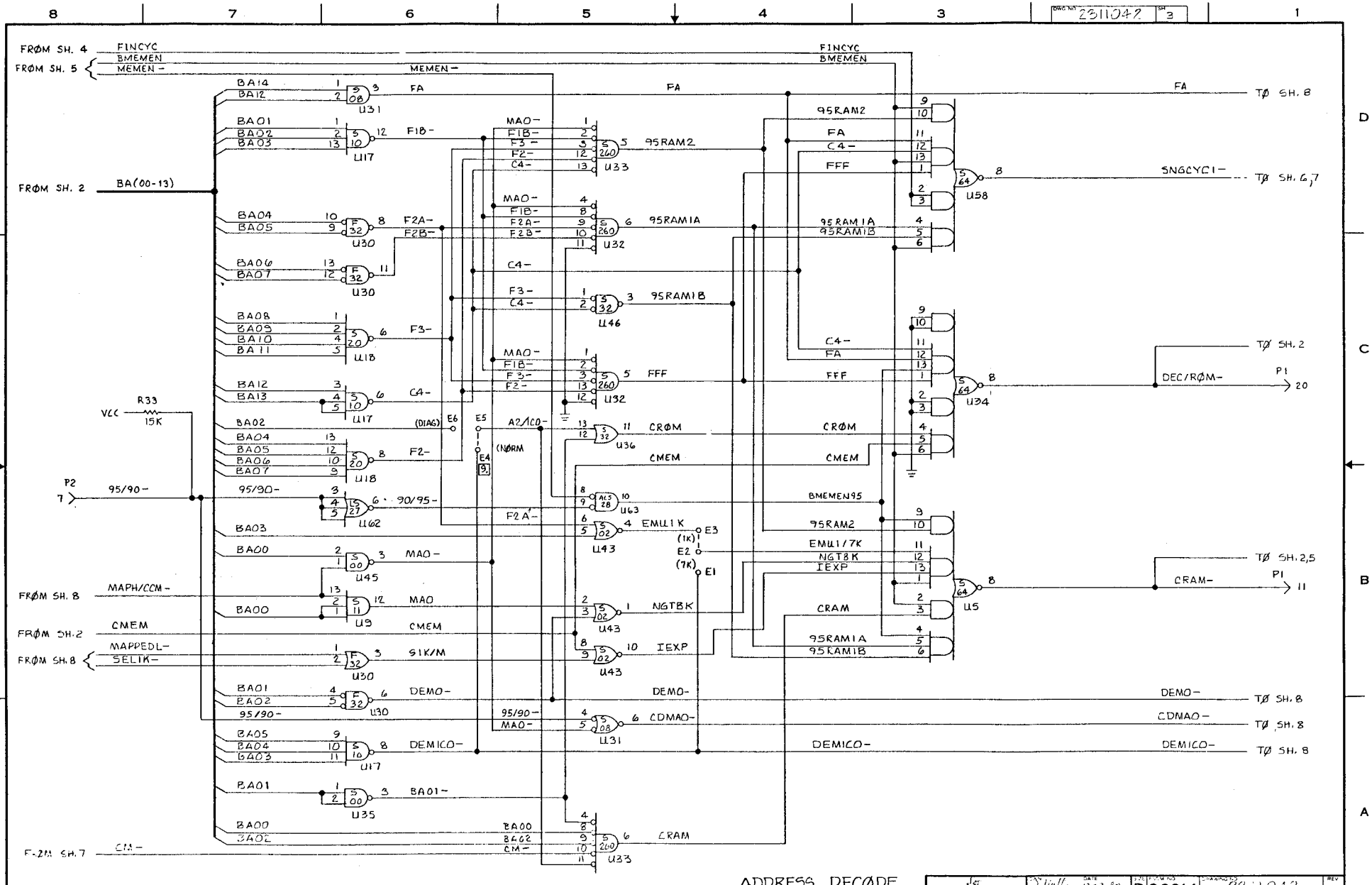

FRØM SH. 4
FRØM SH. 5
FRØM SH. 2
FRØM SH. 8
FRØM SH. 2
FRØM SH. 8
FINCYC
BMEMEN
MEMEN -
BA(00-13)
R33
15K
VCC
95/90-
MAPH/CCM-
CMEM
MAPPEDL-
SELIK-
CM-
TØ SH. 8
SNGCYCI-
TØ SH. 6,7
TØ SH. 2
DEC/RØM-
TØ SH. 2,5
CRAM-
95RAM2
95RAM1A
95RAM1B
FFF
CRØM
BMEMEN95
EMU1K
EMU1/7K
NGTBK
IEXP
CRAM
DEMO-
CDMAO-
DEMICO-
ADDRESS DECØDE
TEXAS INSTRUMENTS
D 96214
2311042

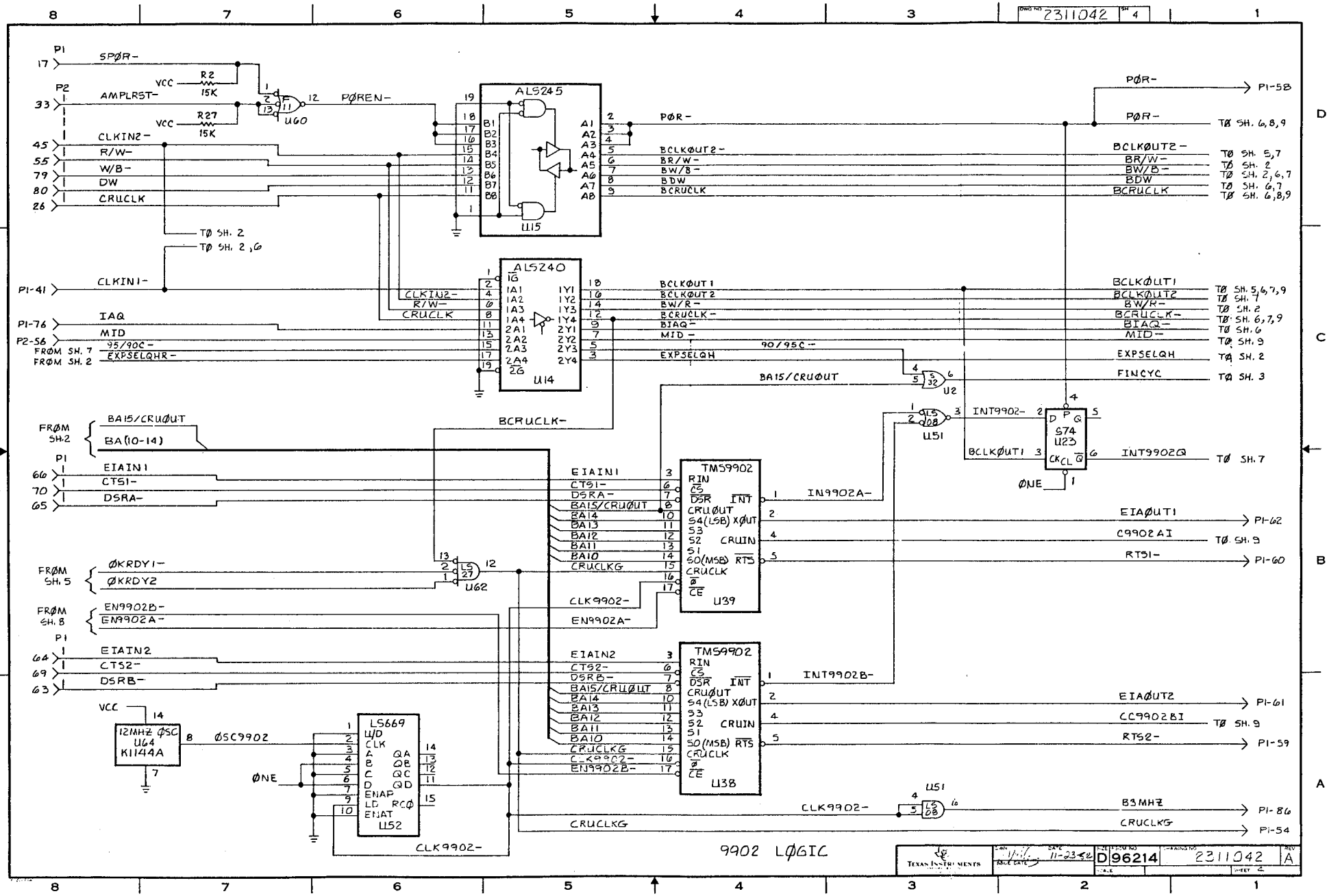

2311042
4
P1
SPØR-
P2
AMPLRST-
VCC
R2
15K
R27
15K
U60
PØREN-
CLKIN2-
R/W-
W/B-
DW
CRUCLK
TØ SH. 2
TØ SH. 2,6
ALS245
U15
PØR-
BCLKØUT2-
BR/W-
BW/B-
BDW
BCRUCLK
P1-58
TØ SH. 6,8,9
TØ SH. 5,7
TØ SH. 2
TØ SH. 2,6,7
TØ SH. 6,7
TØ SH. 6,8,9
P1-41
CLKIN1-
ALS240
U14
BCLKØUT1
BCLKØUT2
BW/R-
BCRUCLK-
BIAQ-
MID-
EXPSELQH
90/95C-
BA15/CRUØUT
U2
TØ SH. 5,6,7,9
TØ SH. 7
TØ SH. 2
TØ SH. 6,7,9
TØ SH. 6
TØ SH. 9
TØ SH. 2
FINCYC
TØ SH. 3
P1-76
IAQ
P2-56
MID
FRØM SH. 7
FRØM SH. 2
95/90C-
EXPSELQHR-
FRØM SH.2
BA15/CRUØUT
BA(10-14)
BCRUCLK-
U51
INT9902-
BCLKØUT1
S74
U23
INT9902Q
TØ SH. 7
ØNE
P1
EIAIN1
CTS1-
DSRA-
TMS9902
U39
IN9902A-
EIAØUT1
P1-62
C9902AI
TØ SH. 9
RTS1-
P1-60
FRØM SH. 5
ØKRDY1-
ØKRDY2
U62
CLK9902-
EN9902A-
FRØM SH. 8
EN9902B-
EN9902A-
P1
EIAIN2
CTS2-
DSRB-
TMS9902
U38
INT9902B-
EIAØUT2
P1-61
CC9902BI
TØ SH. 9
RTS2-
P1-59
VCC
12MHZ ØSC
U64
K1144A
ØSC9902
LS669
U52
ØNE
CLK9902-
U51
B3MHZ
P1-86
CRUCLKG
P1-54
9902 LØGIC
TEXAS INSTRUMENTS
11-23-82
D
96214
2311042
A

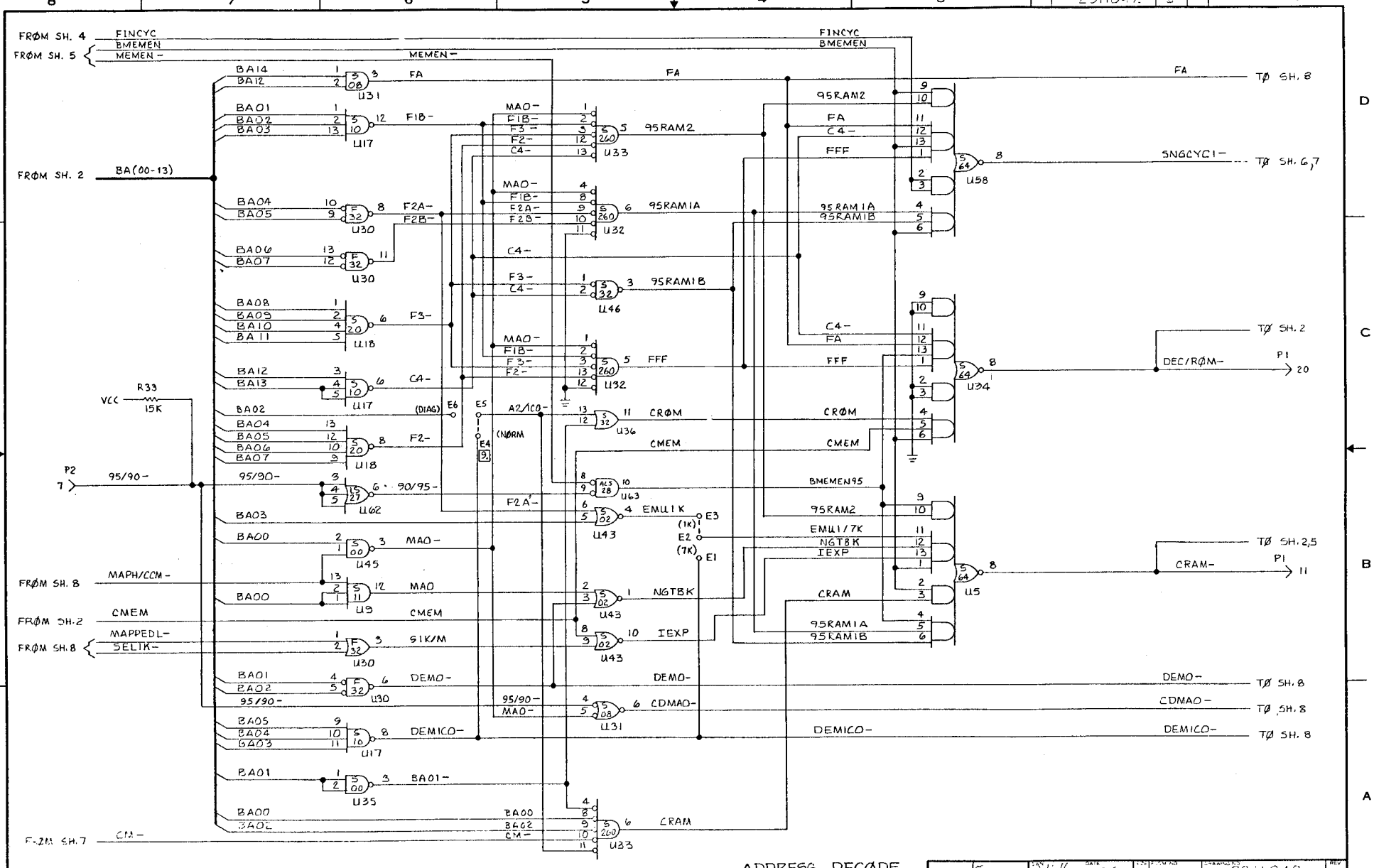

FRØM SH. 4
FINCYC
BMEMEN
FRØM SH. 5
MEMEN-
FRØM SH. 2
BA(00-13)
VCC
R33
15K
P2
7
95/90-
FRØM SH. 8
MAPH/CCM-
FRØM SH. 2
CMEM
FRØM SH. 8
MAPPEDL-
SELIK-
F-2M SH. 7
CM-
BA14
BA12
BA01
BA02
BA03
BA04
BA05
BA06
BA07
BA08
BA09
BA10
BA11
BA12
BA13
BA02
BA04
BA05
BA06
BA07
BA03
BA00
BA00
BA01
BA02
95/90-
BA05
BA04
BA03
BA01
BA00
BA02
FA
F1B-
F2A-
F2B-
F3-
C4-
F2-
(DIAG)
E6
E5
E4
(NØRM
90/95-
MAO-
MAO
S1K/M
DEMO-
DEMICO-
BA01-
MAO-
F1B-
F3-
F2-
C4-
95RAM2
95RAM1A
95RAM1B
FFF
A2/ICO-
CRØM
CMEM
F2A-
EMU1K
(1K)
E3
E2
(7K)
E1
NGTBK
IEXP
DEMO-
CDMAO-
DEMICO-
CRAM
95RAM2
FA
C4-
FFF
95RAM1A
95RAM1B
C4-
FA
FFF
CRØM
CMEM
BMEMEN95
95RAM2
EMU1/7K
NGTBK
IEXP
CRAM
95RAM1A
95RAM1B
FINCYC
BMEMEN
FA
TØ SH. 8
SNGCYC1-
TØ SH. 6,7
TØ SH. 2
DEC/RØM-
P1
20
TØ SH. 2,5
CRAM-
P1
11
DEMO-
TØ SH. 8
CDMAO-
TØ SH. 8
DEMICO-
TØ SH. 8
U31
U17
U30
U18
U62
U45
U9
U35
U33
U32
U46
U36
U63
U43
U58
U34
U5
ADDRESS DECØDE
TEXAS INSTRUMENTS
D
96214
2311042

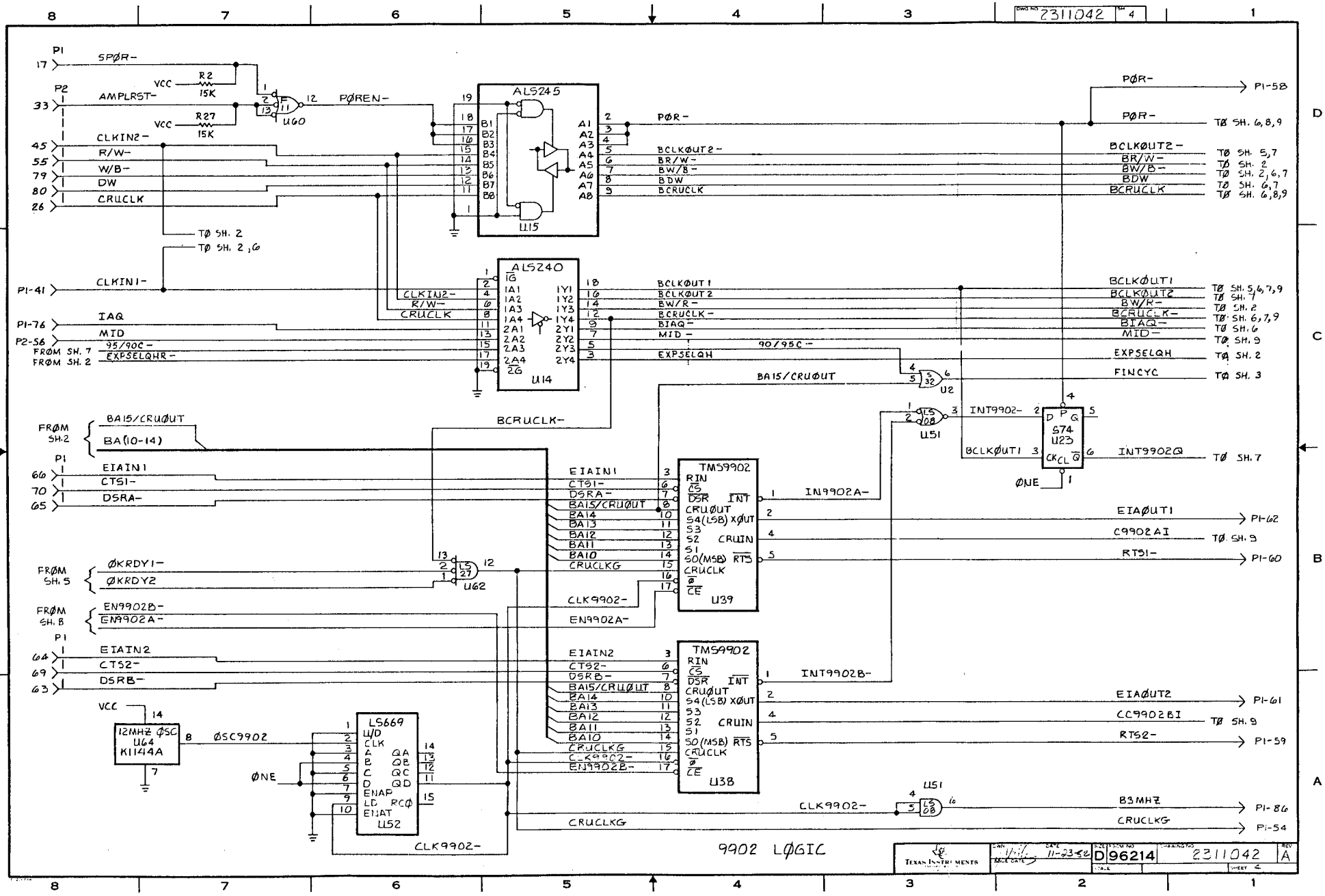
9902 LØGIC
TEXAS INSTRUMENTS
D 96214
2311042
A
A-27

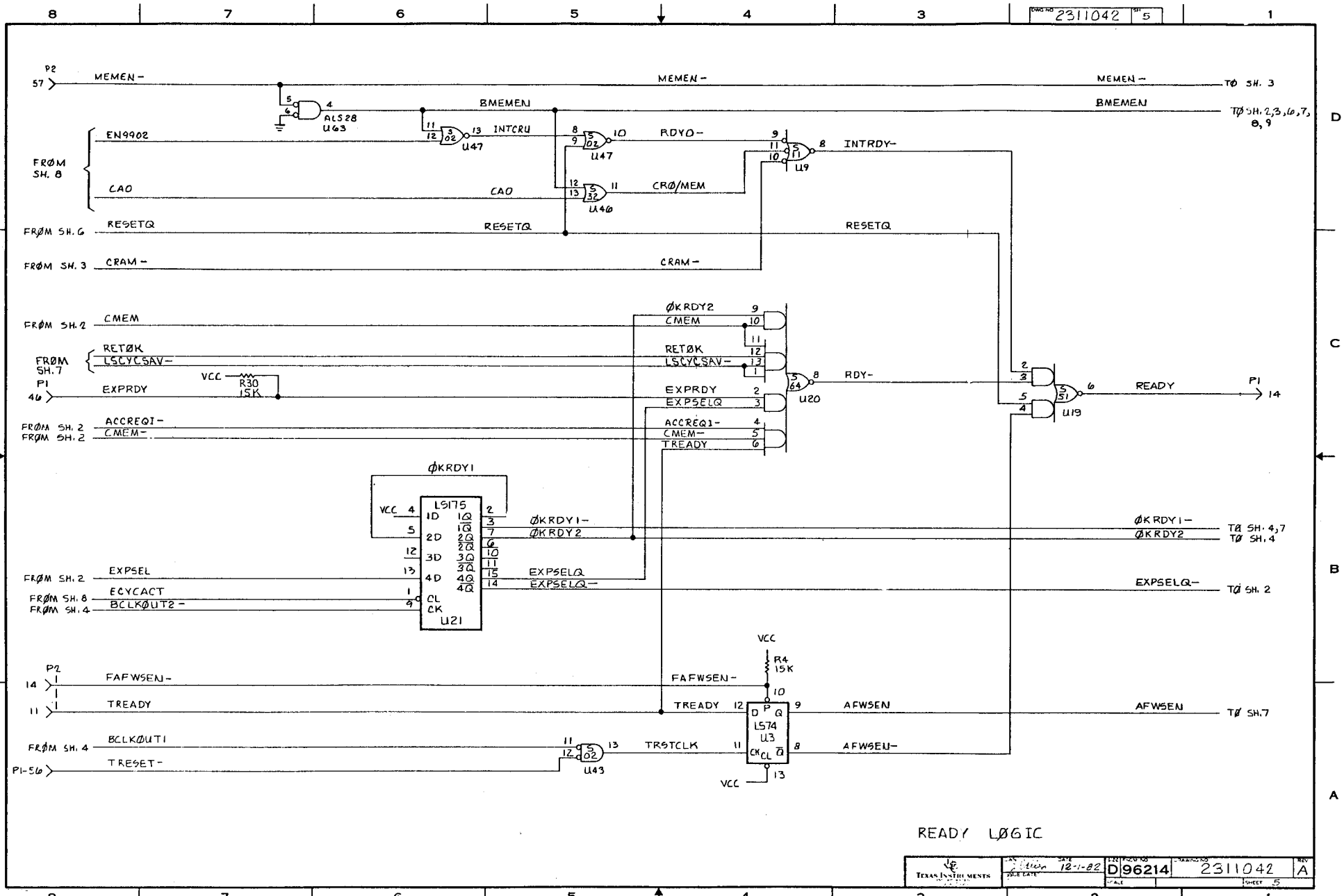

DWG NO 2311042 SH 5
P2
57
MEMEN-
MEMEN-
MEMEN-
TØ SH. 3
ALS28
U63
BMEMEN
BMEMEN
TØ SH. 2,3,6,7, 8, 9
FRØM SH. 8
EN9902
INTCRU
U47
RDYO-
U47
U9
INTRDY-
CAO
CAO
U46
CRØ/MEM
FRØM SH. 6
RESETQ
RESETQ
RESETQ
FRØM SH. 3
CRAM-
CRAM-
FRØM SH. 2
CMEM
ØKRDY2
CMEM
FRØM SH. 7
RETØK
LSCYCSAV-
RETØK
LSCYCSAV-
P1
46
EXPRDY
VCC
R30
15K
EXPRDY
EXPSELQ
U20
RDY-
U19
READY
P1
14
FRØM SH. 2
ACCREQI-
FRØM SH. 2
CMEM-
ACCREQI-
CMEM-
TREADY
ØKRDY1
LS175
VCC
ØKRDY1-
ØKRDY2
ØKRDY1-
ØKRDY2
TØ SH. 4,7
TØ SH. 4
FRØM SH. 2
EXPSEL
EXPSELQ
EXPSELQ-
EXPSELQ-
TØ SH. 2
FRØM SH. 8
ECYCACT
FRØM SH. 4
BCLKØUT2-
U21
P2
14
FAFWSEN-
FAFWSEN-
VCC
R4
15K
11
TREADY
TREADY
L574
U3
AFWSEN
AFWSEN
TØ SH. 7
FRØM SH. 4
BCLKØUT1
TRSTCLK
AFWSEN-
P1-56
TRESET-
U43
VCC
READY LØGIC
TEXAS INSTRUMENTS
12-1-82
D
96214
2311042
A
SHEET 5

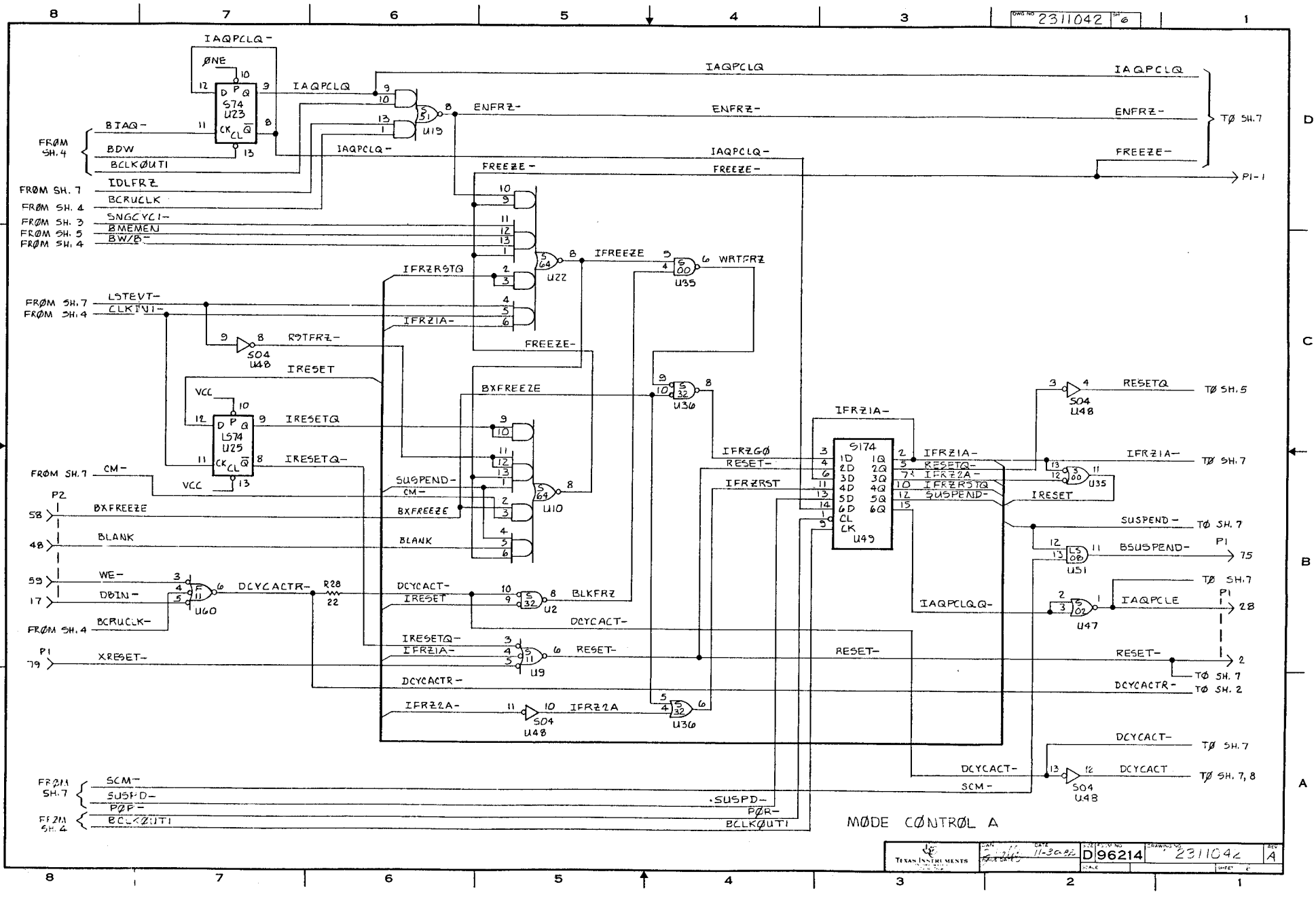

2311042
6
IAQPCLQ-
ØNE
S74
U23
IAQPCLQ
ENFRZ-
U19
BIAQ-
BDW
BCLKØUTI
FRØM SH. 4
IAQPCLQ-
FREEZE-
FRØM SH. 7
IDLFRZ
BCRUCLK
FRØM SH. 4
SNGCYCI-
BMEMEN
BW/B-
FRØM SH. 3
FRØM SH. 5
FRØM SH. 4
IFREEZE
U22
WRTFRZ
U35
IFRZRSTQ
IFRZIA-
FRØM SH. 7
LSTEVT-
CLKINI-
FRØM SH. 4
RSTFRZ-
S04
U48
IRESET
VCC
IRESETQ
IRESETQ-
L574
U25
FRØM SH. 7
CM-
SUSPEND-
CM-
BXFREEZE
BLANK
U10
U36
IFRZGØ
RESET-
IFRZRST
IFRZIA-
S174
U49
IFRZIA-
RESETQ-
IFRZ2A-
IFRZRSTQ
SUSPEND-
IRESET
RESETQ
TØ SH. 5
IFRZIA-
TØ SH. 7
SUSPEND-
TØ SH. 7
BSUSPEND-
P1
75
U51
IAQPCLQQ-
IAQPCLE
U47
TØ SH. 7
P1
28
P2
58
48
59
17
BXFREEZE
BLANK
WE-
DBIN-
BCRUCLK-
FRØM SH. 4
U60
DCYCACTR-
R28
22
DCYCACT-
IRESET
BLKFRZ
U2
DCYCACT-
IRESETQ-
IFRZIA-
RESET-
U9
P1
79
XRESET-
RESET-
RESET-
2
TØ SH. 7
DCYCACTR-
TØ SH. 2
IFRZ2A-
IFRZ2A
S04
U48
U36
DCYCACT-
TØ SH. 7
DCYCACT-
SCM-
DCYCACT
TØ SH. 7, 8
FRØM SH. 7
SCM-
SUSPD-
PØP-
FRØM SH. 4
BCLKØUTI
SUSPD-
PØR-
BCLKØUTI
MØDE CØNTRØL A
TEXAS INSTRUMENTS
11-30-82
D
96214
2311042
A